Assemblers, Linkers, and Loaders

CS 3410
Computer System Organization & Programming

These slides are the product of many rounds of teaching CS 3410 by Professors Weatherspoon, Bala, Bracy, and Sirer.

Big Picture: Where are we going?

C

compiler

MIPS assembly

assembler

machine code

loader

CPU

Circuits

Gates

Transistors

Silicon

```
int x = 10;
x = x + 15;
```

```
addi r5, r0, 10
addi r5, r5, 15
```

r0 = 0

r5 = r0 + 10

r5 = r15 + 15

addi	r0	r5	10
001000	00000	00101	0000000000001010
001000	00101	00101	0000000000001111

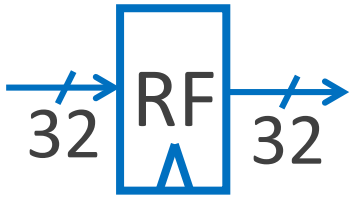

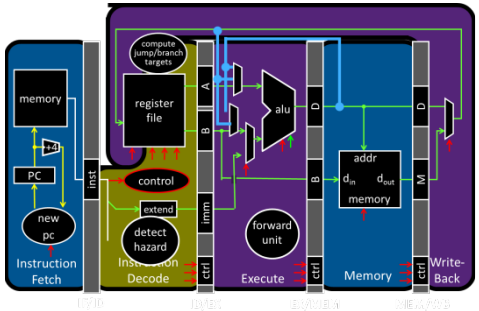

Big Picture: Where are we going?

C

compiler

MIPS assembly

assembler

machine code

loader

CPU

Circuits

Gates

Transistors

Silicon

```
int x = 10;
x = 2 * x + 15;
```

High Level Languages

```
addi r5, r0, 10
muli r5, r5, 2
addi r5, r5, 15
```

```
00100000000001010000000000001010
00000000000001010010100001000000
00100000101001010000000
```

Instruction Set Architecture (ISA)

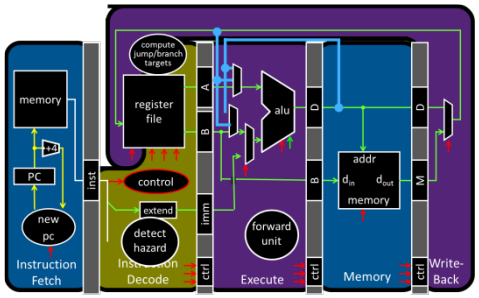

From Writing to Running

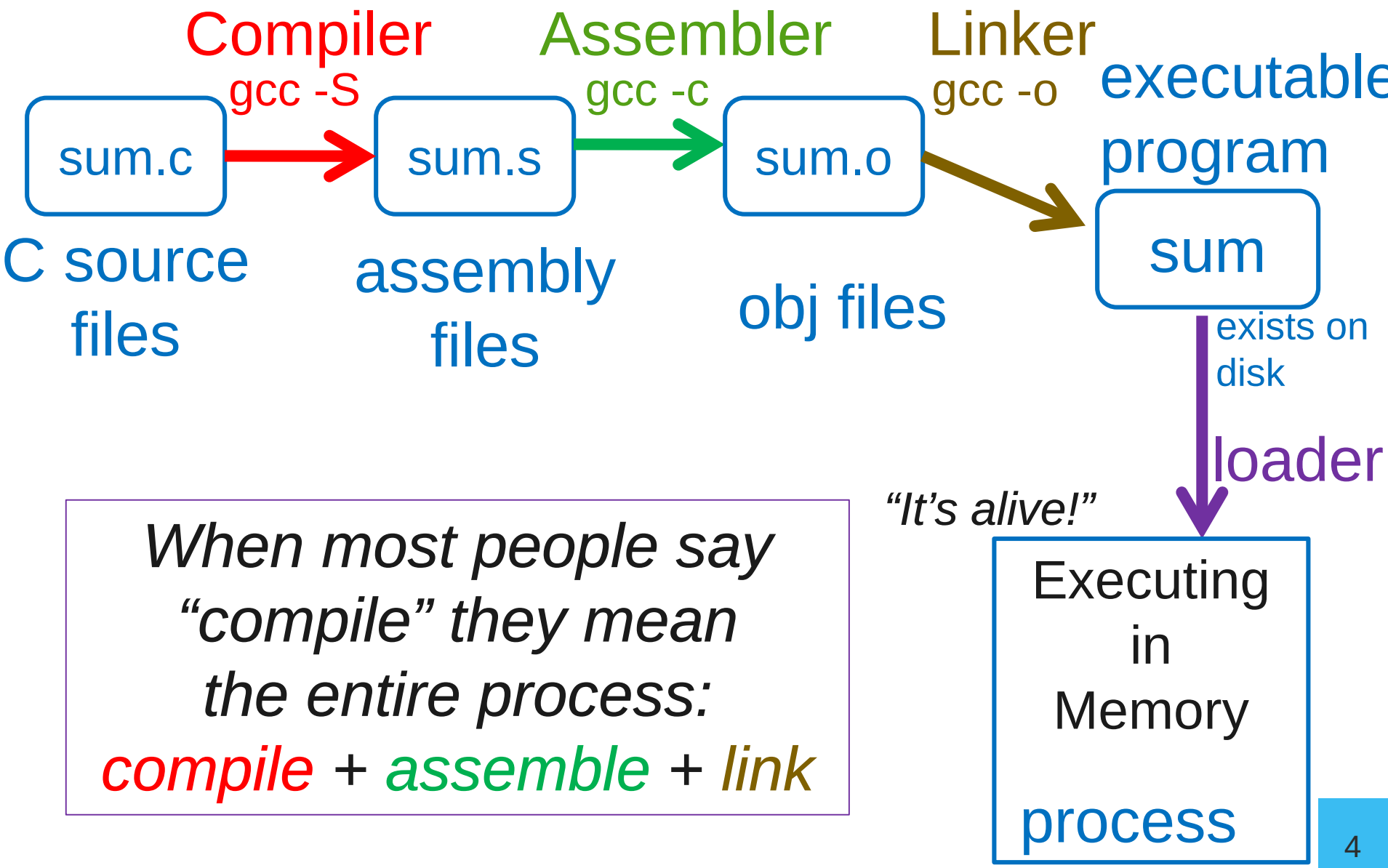

When most people say "compile" they mean the entire process:
compile + *assemble* + *link*

Example: sum.c

```
#include <stdio.h>

int n = 100;
int main (int argc, char* argv[ ]) {
    int i;
    int m = n;
    int sum = 0;

    for (i = 1; i <= m; i++) {
        sum += i;
    }
    printf ("Sum 1 to %d is %d\n", n, sum);
}
```

Example: sum.c

- # Compile
- [ugclinux] mipsel-linux-gcc –S sum.c

- # Assemble
- [ugclinux] mipsel-linux-gcc –c sum.s

- # Link
- [ugclinux] mipsel-linux-gcc –o sum sum.o ${LINKFLAG
- # -nostartfiles –nodefaultlibs
- # -static -mno-xgot -mno-embedded-pic -mno-abicalls -G 0 -DMIPS -Wall

- # Load
- [ugclinux] simulate sum
- Sum 1 to 100 is 5050
- MIPS program exits with status 0 (approx. 2007 instructions in 143000 nsec at 14.14034 MHz)

Compiler

Input: Code File (.c)

- Source code
- #includes, function declarations & definitions, global variables, *etc.*

Output: Assembly File (MIPS)

- MIPS assembly instructions (.s file)

```
for (i = 1; i <= m; i++) {
   sum += i;
}
```

→

```
li   $2,1
lw   $3,28($fp)
slt  $2,$3,$2
```

sum.s (abridged)

```
        .globl  n
        .data
        .type   n, @object
n:      .word   100
        .rdata
$str0:  .ascii  "Sum 1 to %d is %d\n"
        .text
        .globl  main
        .type   main, @function
main:   addiu   $sp,$sp,-48
        sw      $31,44($sp)
        sw      $fp,40($sp)
        move    $fp,$sp
        sw      $4,48($fp)
        sw      $5,52($fp)
        la      $2,n
        lw      $2,0($2)
        sw      $2,28($fp)
        sw      $0,32($fp)
        li      $2,1
        sw      $2,24($fp)
$L2:    lw      $2,24($fp)
        lw      $3,28($fp)
        slt     $2,$3,$2
        bne     $2,$0,$L3
        lw      $3,32($fp)
        lw      $2,24($fp)
        addu    $2,$3,$2
        sw      $2,32($fp)
        lw      $2,24($fp)
        addiu   $2,$2,1
        sw      $2,24($fp)
        b       $L2
$L3:    la      $4,$str0
        lw      $5,28($fp)
        lw      $6,32($fp)
        jal     printf
        move    $sp,$fp
        lw      $31,44($sp)
        lw      $fp,40($sp)
        addiu   $sp,$sp,48
        j       $31
```

sum.s (abridged)

```
        .globl  n
        .data
        .type   n, @object
n:      .word   100
        .rdata
$str0:  .ascii  "Sum 1 to %d is %d\n"
        .text
        .globl  main
        .type   main, @function
main:   addiu   $sp,$sp,-48
        sw      $31,44($sp)
        sw      $fp,40($sp)
        move    $fp,$sp
        sw      $4,48($fp)      $a0
        sw      $5,52($fp)      $a1
        la      $2,n            $v0
        lw      $2,0($2)        $v0=100
        sw      $2,28($fp)      m=100
        sw      $0,32($fp)      sum=0
        li      $2,1
        sw      $2,24($fp)      i=1
```

prologue

```
$L2:    lw      $2,24($fp)      i=1
        lw      $3,28($fp)      m=100
        slt     $2,$3,$2        if(m < i)
        bne     $2,$0,$L3       100 < 1
        lw      $3,32($fp)      v1=0(sum)
        lw      $2,24($fp)      v0=1(i)
        addu    $2,$3,$2        v0=1(0+1)
        sw      $2,32($fp)      sum=1
        lw      $2,24($fp)      i=1
        addiu   $2,$2,1         i=2 (1+1)
        sw      $2,24($fp)      i=2
        b       $L2
$L3:    la      $a0 $4,$str0    str
        lw      $a1 $5,28($fp)  m=100
        lw      $a2 $6,32($fp)  sum
        jal     printf
        move    $sp,$fp
        lw      $31,44($sp)
        lw      $fp,40($sp)
        addiu   $sp,$sp,48
        j       $31
```

call printf

epilogue

Assembler

Input: Assembly File (.s)

- assembly instructions, pseudo-instructions
- program data (strings, variables), layout directives

Output: Object File in binary machine code MIPS instructions in executable form (.o file in Unix, .obj in Windows)

```
addi r5, r0, 10
muli r5, r5, 2
addi r5, r5, 15
```

→

```
00100000000001010000000000001010
00000000000001010010100001000000
00100000101001010000000000001111
```

MIPS Assembly Instructions

Arithmetic/Logical

- ADD, ADDU, SUB, SUBU, AND, OR, XOR, NOR, SLT, SLTU
- ADDI, ADDIU, ANDI, ORI, XORI, LUI, SLL, SRL, SLLV, SRLV, SRAV, SLTI, SLTIU
- MULT, DIV, MFLO, MTLO, MFHI, MTHI

Memory Access

- LW, LH, LB, LHU, LBU, LWL, LWR
- SW, SH, SB, SWL, SWR

Control flow

- BEQ, BNE, BLEZ, BLTZ, BGEZ, BGTZ
- J, JR, JAL, JALR, BEQL, BNEL, BLEZL, BGTZL

Special

- LL, SC, SYSCALL, BREAK, SYNC, COPROC

Pseudo-Instructions

Assembly shorthand, technically not machine instructions, but easily converted into 1+ instructions that are

Pseudo-Insns	Actual Insns	Functionality
NOP	SLL r0, r0, 0	# do nothing
MOVE reg, reg	ADD r2, r0, r1	# copy between regs
LI reg, 0x45678	LUI reg, 0x4 ORI reg, reg, 0x5678	#load immediate
LA reg, label		# load address (32 bits)
B		# unconditional branch
BLT reg, reg, label	SLT r1, rA, rB BNE r1, r0, label	# branch less than

+ *a few more…*

Program Layout

- Programs consist of segments used for different purposes
  - Text: holds instructions
  - Data: holds statically allocated program data such as variables, strings, etc.

Assembling Programs

```
.text
.ent main
main: la $4, Larray
li $5, 15
...
li $4, 0
jal exit
.end main
.data
Larray:
.long 51, 491, 3991
```

- Assembly files consist of a mix of
- + instructions
- + pseudo-instructions
- + assembler (data/layout) directives
  (Assembler lays out binary values in memory based on directives)
- Assembled to an Object File
  - Header
  - Text Segment
  - Data Segment
  - Relocation Information
  - Symbol Table
  - Debugging Information

Assembling Programs

- Assembly using a (modified) Harvard architecture
  - Need segments since data and program stored together in memory

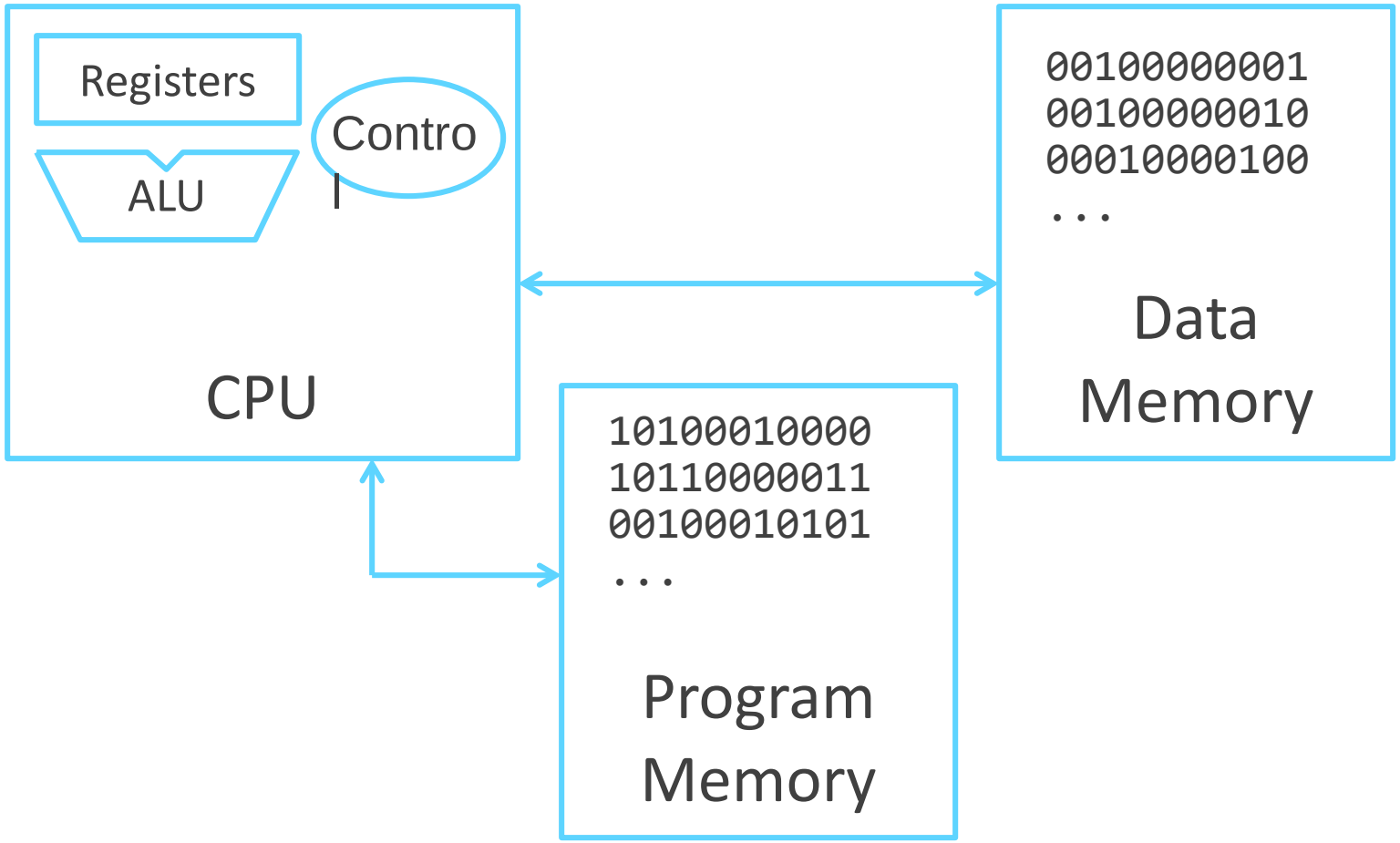

Takeaway

- Assembly is a low-level task
  - Need to assemble assembly language into machine code binary. Requires
    - Assembly language instructions
    - *pseudo-instructions*
    - And Specify layout and data using *assembler directives*

  - Today, we use a modified Harvard Architecture (Von Neumann architecture) that mixes data and instructions in memory

    … but kept in separate *segments*

    … and has separate caches

Symbols and References

math.c

```
int pi = 3;
int e = 2;
static int randomval = 7;

extern int usrid;
extern int printf(char *str, …);

int square(int x) { … }
static int is_prime(int x) { … }
int pick_prime() { … }
int get_n() {
        return usrid;
}
```

(extern == defined in another file)

Global labels: Externally visible "exported" symbols

- Can be referenced from other object files
- Exported functions, global variables
- Examples: pi, e, userid, printf, pick_prime, pick_random

Local labels: Internally visible only symbols

- Only used within this object file
- static functions, static variables, loop labels, …
- Examples: randomval, is_prime

Handling forward references

Example:

```
      bne $1, $2, L      Looking for L
      sll $0, $0, 0
L:    addiu $2, $3, 0x2  Found L
```

The assembler will change this to

```
bne $1, $2, +1
sll $0, $0, 0
addiu $2, $3, $0x2
```

Final machine code

```
0X14220001 # bne      actually:  000101...
0x00000000 # sll                 000000...
0x24620002 # addiu               001001...
```

Object file

Object File

Header

- Size and position of pieces of file

Text Segment

- instructions

Data Segment

- static data (local/global vars, strings, constants)

Debugging Information

- line number → code address map, *etc.*

Symbol Table

- External (exported) references
- Unresolved (imported) references

Object File Formats

Unix

- a.out
- COFF: Common Object File Format
- ELF: Executable and Linking Format

Windows

- PE: Portable Executable

All support both executable and object files

Objdump disassembly

```
> mipsel-linux-objdump --disassemble math.o

Disassembly of section .text:

00000000 <get_n>:
   0:   27bdfff8  addiu sp,sp,-8
   4:   afbe0000  sw   s8,0(sp)
   8:   03a0f021  move s8,sp
   c:   3c020000  lui  v0,0x0
  10:   8c420008  lw   v0,8(v0)
  14:   03c0e821  move sp,s8
  18:   8fbe0000  lw   s8,0(sp)
  1c:   27bd0008  addiu sp,sp,8
  20:   03e00008  jr   ra
  24:   00000000  nop
```

prologue

body

epilogue

unresolved symbol (see symbol table next slide)

elsewhere in another file: int usrid = 41;

```
int get_n() {
   return usrid;
}
```

Objdump symbols

[F]unction
[O]bject
[l]ocal
[g]lobal

```
> mipsel-linux-objdump --syms math.o
```

```
SYMBOL TABLE:          segment          size
00000000 l   df *ABS*          00000000 math.c
00000000 l   d  .text          00000000 .text
00000000 l   d  .data          00000000 .data
00000000 l   d  .bss           00000000 .bss
00000008 l   O  .data          00000004 randomval
00000060 l   F  .text          00000028 is_prime
00000000 l   d  .rodata        00000000 .rodata
00000000 l   d  .comment       00000000 .comment
00000000 g   O  .data          00000004 pi
00000004 g   O  .data          00000004 e
00000000 g   F  .text          00000028 get_n
00000028 g   F  .text          00000038 square
00000088 g   F  .text          0000004c pick_prime
00000000        *UND*          00000000 usrid
00000000        *UND*          00000000 printf
```

static local fn
@ addr 0x60
size = x28 bytes

external references (undefined)

Separate Compilation & Assembly

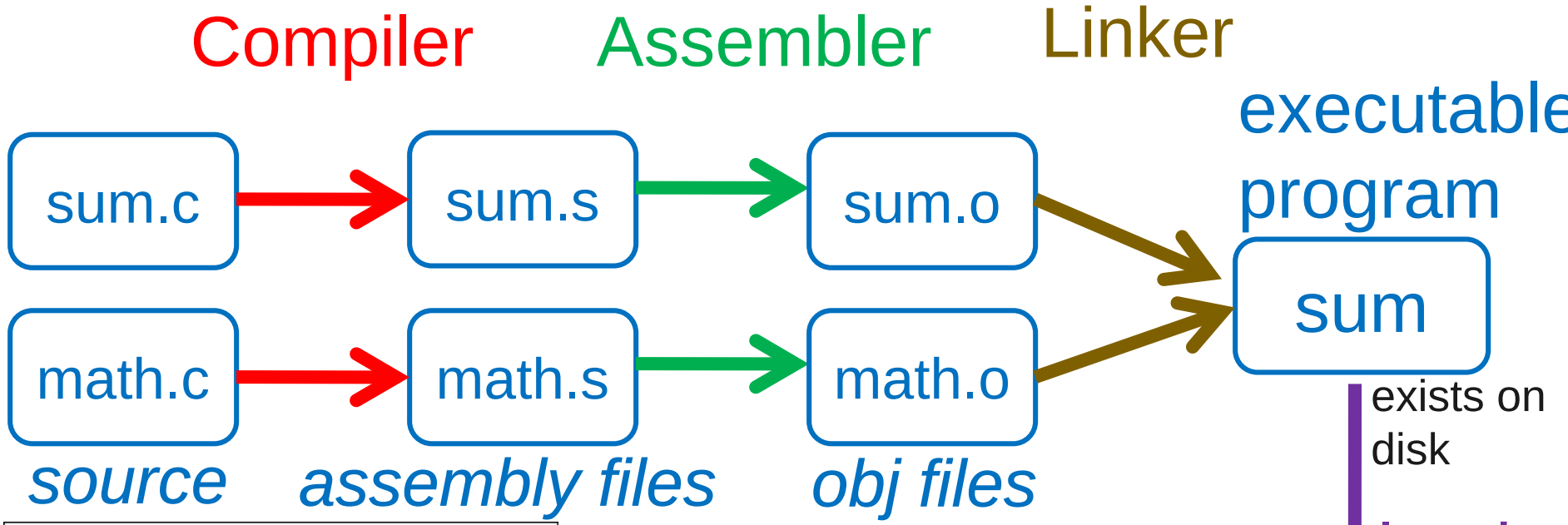

http://xkcd.com/303/

small change ?

→ recompile one module only

Linkers

Linker combines object files into an executable file

- Resolve as-yet-unresolved symbols
- Each has illusion of own address space
  → Relocate each object's text and data segments
- Record top-level entry point in executable file

End result: a program on disk, ready to execute

E.g.	./sum	Linux
	./sum.exe	Windows
	simulate sum	Class MIPS simulator

Static Libraries

Static Library: Collection of object files (think: like a zip archive)

Q: Every program contains the entire library?!?
A: No, Linker picks only object files needed to resolve undefined references at link time

e.g. libc.a contains many objects:

- printf.o, fprintf.o, vprintf.o, sprintf.o, snprintf.o, …
- read.o, write.o, open.o, close.o, mkdir.o, readdir.o, …
- rand.o, exit.o, sleep.o, time.o, ….

Linker Example: Resolving an External Fn Call

main.o

.text

```
...
40  0C000000 ★
44  21035000
48  1b80050C
4C  8C040000
50  21047002
54  0C000000 ★
...
```

Symbol table

```
00 T    main
00 D    usrid
*UND*   printf
*UND*   pi
*UND*   get_n
```

Relocation info

```
40,JAL, printf
...
54,JAL, get_n
```

math.o

```
...
24  21032040
28  0C000000 ★
2C  1b301402
30  3C040000
34  34040000
...
```

```
20 T    get_n
00 D    pi
*UND*   printf
*UND*   usrid
```

```
28,JAL, printf
```

★ JAL printf → JAL ???
Unresolved references to printf and get_n

iClicker Question 1

main.o

.text

```
...
40  0C000000 ★
44  21035000
48  1b80050C
4C  8C040000
50  21047002
54  0C000000 ★
...
```

Symbol table

```
00 T    main
00 D    usrid
*UND*   printf
*UND*   pi
*UND*   get_n
```

Relocation info

```
40,JAL, printf
...
54,JAL, get_n
```

math.o

```
...
24  21032040
28  0C000000 ★
2C  1b301402
30  3C040000
34  34040000
...
```

```
20 T    get_n
00 D    pi
*UND*   printf
*UND*   usrid
```

```
28,JAL, printf
```

printf.o

```
...
3C T    printf
```

★ JAL printf → JAL ???
Unresolved references to printf and get_n

Which symbols are undefined according to **both** main.o and math.o's symbol table?

A) printf
B) pi
C) get_n
D) usr
E) printf & pi

Linker Example: Resolving an External Fn Call

main.o

.text

```
...
40  0C000000 ★
44  21035000
48  1b80050C
4C  8C040000
50  21047002
54  0C000000 ★
...
```

Symbol table

```
00 T     main
00 D     usrid
*UND*    printf
*UND*    pi
*UND*    get_n
```

Relocation info

```
40,JAL, printf
...
54,JAL, get_n
```

math.o

```
...
24  21032040
28  0C000000 ★
2C  1b301402
30  3C040000
34  34040000
...
```

```
20 T    get_n
00 D    pi
*UND*   printf
*UND*   usrid
```

```
28,JAL, printf
```

printf.o

```
...
3C T    printf
```

sum.exe

.text

0040 0000

```
...
21032040
0C40023C
1b301402
3C041000
34040004
...
0C40023C
21035000
1b80050c
8C048004
21047002
0C400020
...
10201000
21040330
22500102
...
```

math

main

printf

JAL printf

JAL printf

JAL get_n

0040 0100

0040 0200

1000 0000

.data

global variables go here (later)

```
Entry:0040 0100
text: 0040 0000
data: 1000 0000
```

★ JAL printf → JAL ???
Unresolved references to printf and get_n

iClicker Question 2

main.o

.text

```
...
40  0C000000 ★
44  21035000
48  1b80050C
4C  8C040000
50  21047002
54  0C000000 ★
...
```

Symbol table

```
00 T    main
00 D    usrid
*UND*   printf
*UND*   pi
*UND*   get_n
```

Relocation info

```
40,JAL, printf
...
54,JAL, get_n
```

math.o

```
...
24  21032040
28  0C000000 ★
2C  1b301402
30  3C040000
34  34040000
...
```

```
20 T    get_n
00 D    pi
*UND*   printf
*UND*   usrid
```

```
28,JAL, printf
```

printf.o

```
...
3C T    printf
```

★ JAL printf → JAL ???
Unresolved references to printf and get_n

Which which 2 symbols are currently assigned the same location?

A) main & printf
B) usrid & pi
C) get_n & printf
D) main & usrid
E) main & pi

Linker Example: Loading a Global Variable

main.o

.text

```
...
40  0C000000
44  21035000
48  1b80050C
4C  8C040000
50  21047002
54  0C000000
...
```

Symbol table

```
00 T     main
00 D     usrid
*UND*    printf
*UND*    pi
*UND*    get_n
```

Relocation info

```
40,JAL, printf
...
54,JAL, get_n
```

math.o

.text

```
...
24  21032040
28  0C000000
2C  1b301402
30  3C040000 ★
34  34040000 ★
...
```

Symbol table

```
20 T     get_n
00 D     pi
*UND*    printf
*UND*    usrid
```

Relocation info

```
28,JAL, printf
30,LUI, usrid
34,LA,  usrid
```

sum.exe

.text

0040 0000

```
...
21032040
0C40023C
1b301402
3C041000
34040004
...
0C40023C
21035000
1b80050c
8C048004
21047002
0C400020
...
10201000
21040330
22500102
...
```

math

main

printf

LA num:
LUI 1000
ORI 0004

0040 0100

0040 0200

.data

1000 0000

```
pi      00000003
usrid   0077616B
```

```
Entry:0040 0100
text: 0040 0000
data: 1000 0000
```

★ LA = LUI/ORI "usrid" → ???
Unresolved references to userid
Need address of global variable

Notice: usrid gets relocated due to collision with pi

iClicker Question

Where does the assembler place the following symbols in the object file that it creates?

A. Text Segment
B. Data Segment
C. Exported reference in symbol table
D. Imported reference in symbol table
E. None of the above

```
#include <stdio.h>
#include heaplib.h

#define HEAP SIZE 16
static int ARR SIZE = 4;

int main() {
   char heap[HEAP SIZE];
   hl init(heap, HEAP SIZE * sizeof(char));
   char* ptr = (char *) hl alloc(heap, ARR SIZE * sizeof(char));
   ptr[0] = 'h';
   ptr[1] = 'i';
   ptr[2] = '\0';
   printf(%s\n, ptr); return 0;
}
```

Q1: HEAP_SIZE
Q2: ARR_SIZE
Q3: hl_init

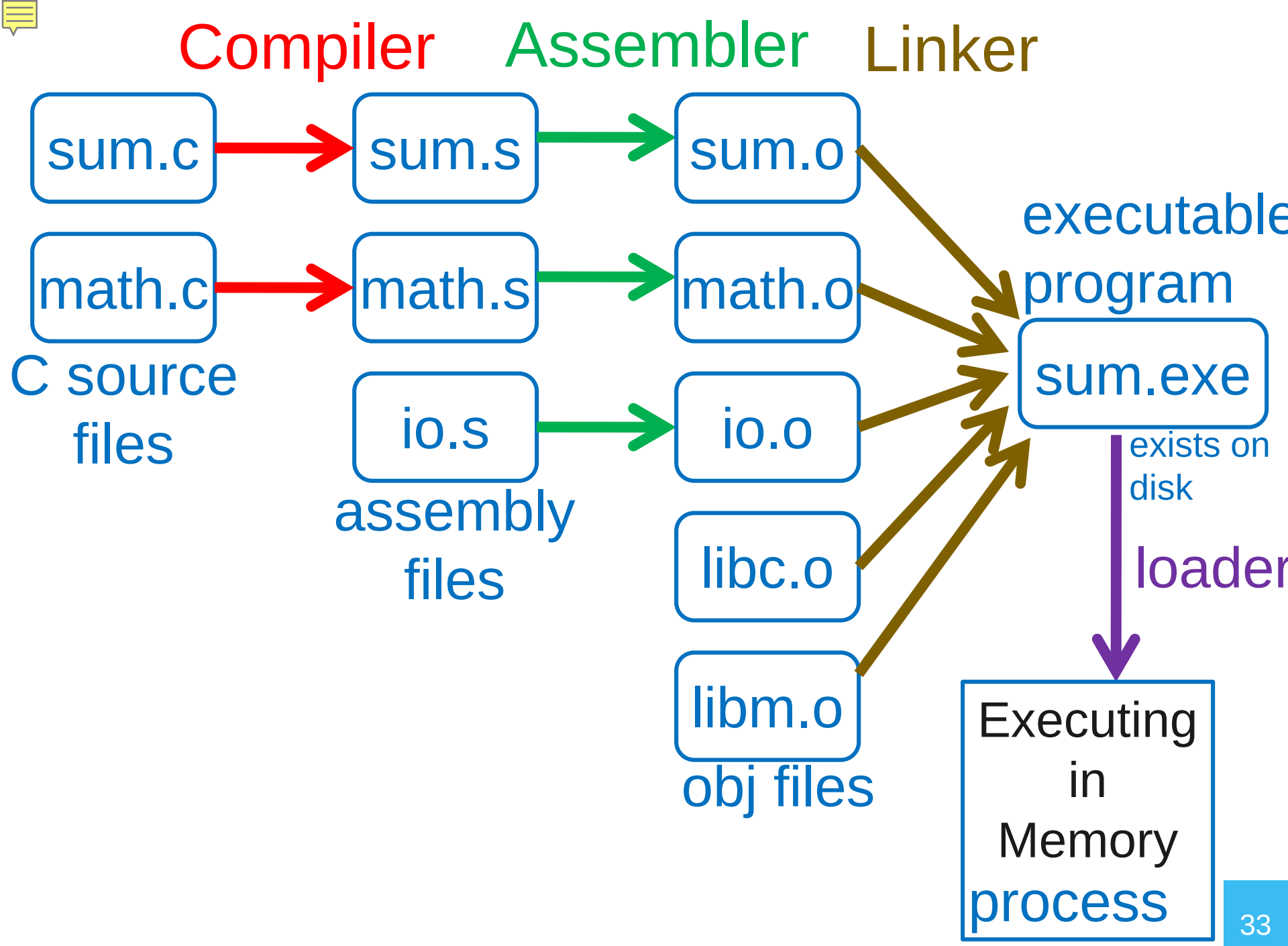
Compiler
Assembler
Linker
sum.c
math.c
C source files
sum.s
math.s
io.s
assembly files
sum.o
math.o
io.o
libc.o
libm.o
obj files
executable program
sum.exe
exists on disk
loader
Executing in Memory process

Loaders

Loader reads executable from disk into memory

- Initializes registers, stack, arguments to first function
- Jumps to entry-point

Part of the Operating System (OS)

Shared Libraries

Q: Every program contains parts of same library?!

A: No, they can use shared libraries

- Executables all point to single *shared library* on disk
- final linking (and relocations) done by the loader

Optimizations:

- Library compiled at fixed non-zero address
- Jump table in each program instead of relocations
- Can even patch jumps on-the-fly

Static and Dynamic Linking

Static linking

- Big executable files (all/most of needed libraries inside
- Don’t benefit from updates to library
- No load-time linking

Dynamic linking

- Small executable files (just point to shared library)
- Library update benefits all programs that use it
- Load-time cost to do final linking
  - But dll code is probably already in memory
  - And can do the linking incrementally, on-demand

Takeaway

Compiler produces assembly files
(contain MIPS assembly, pseudo-instructions, directives, etc.)

Assembler produces object files
(contain MIPS machine code, missing symbols, some layout information, etc.)

Linker joins object files into one executable file
(contains MIPS machine code, no missing symbols, some layout information)

Loader puts program into memory, jumps to 1st insn, and starts executing a *process* (machine code)