Exercise #1

Function Definition

```
def foo(a,b):
    x = a
    y = b
    return x*y+y
```

Function Call

```
>>> foo(3,4)
```

What does the frame look like at the start?

Which One is Closest to Your Answer?

A:

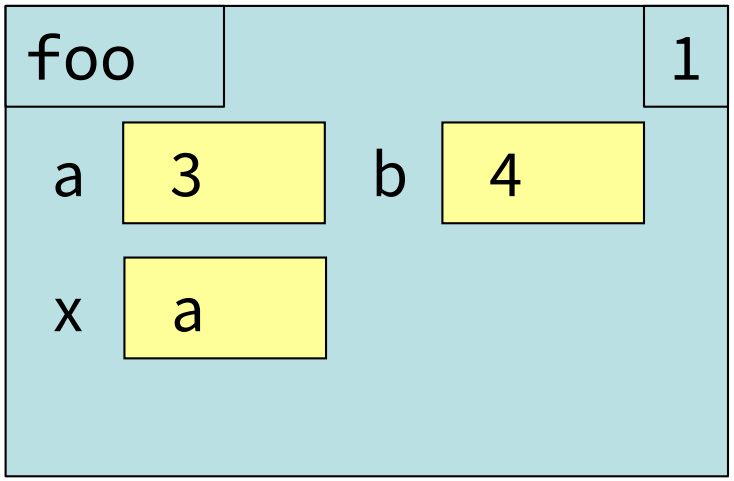

B:

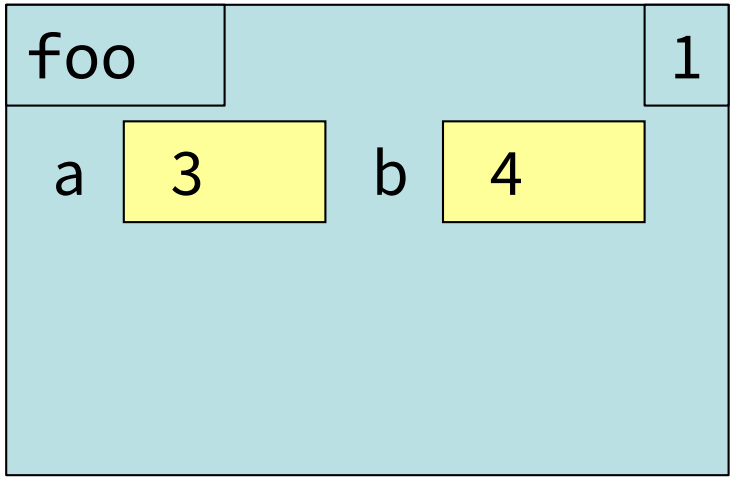

C:

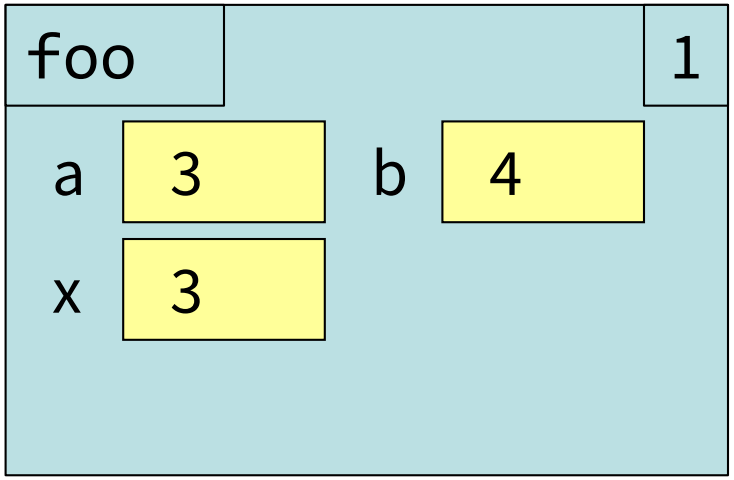

D:

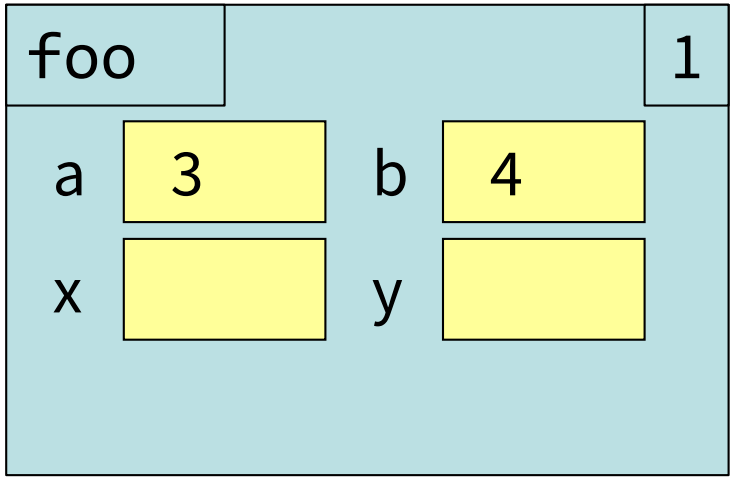

And the answer is…

A:

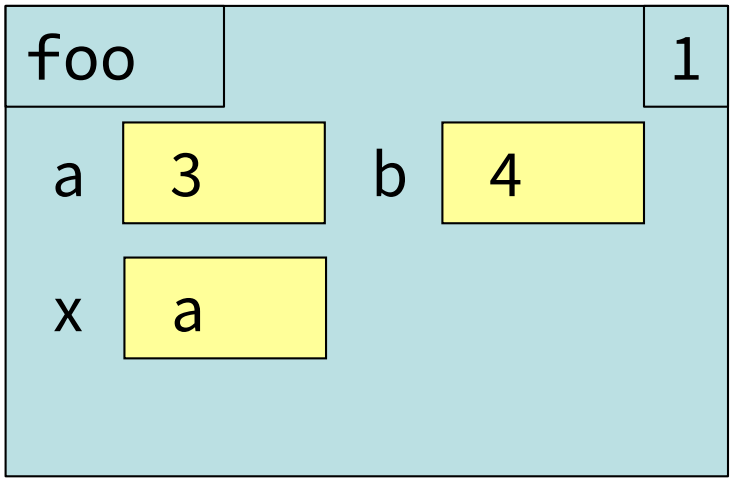

B:

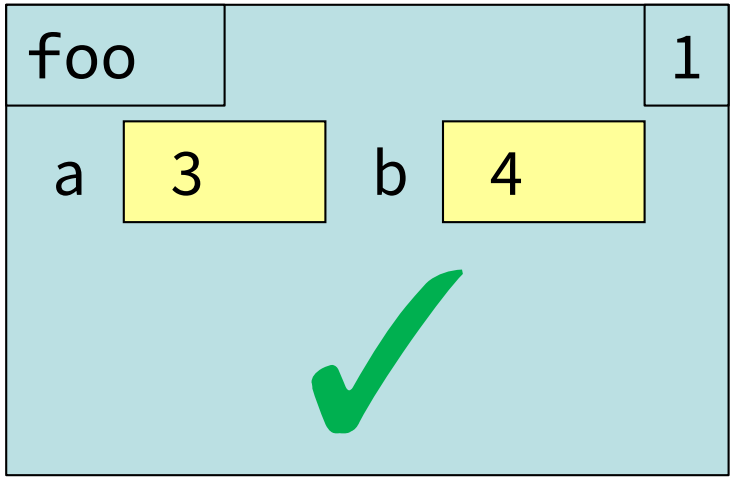

C:

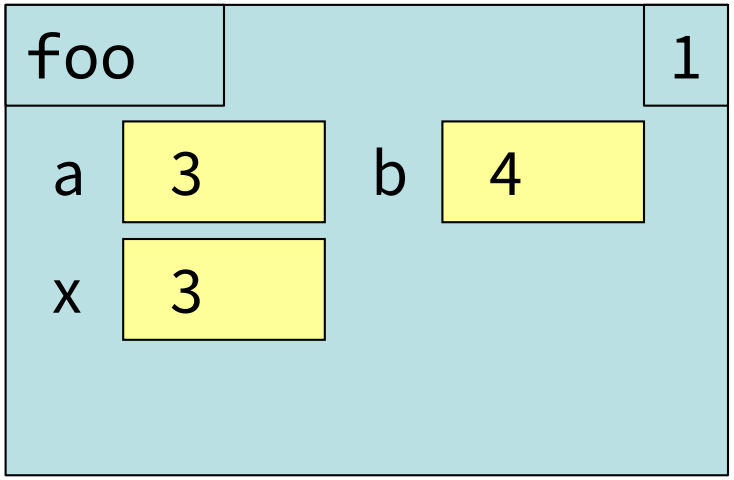

D:

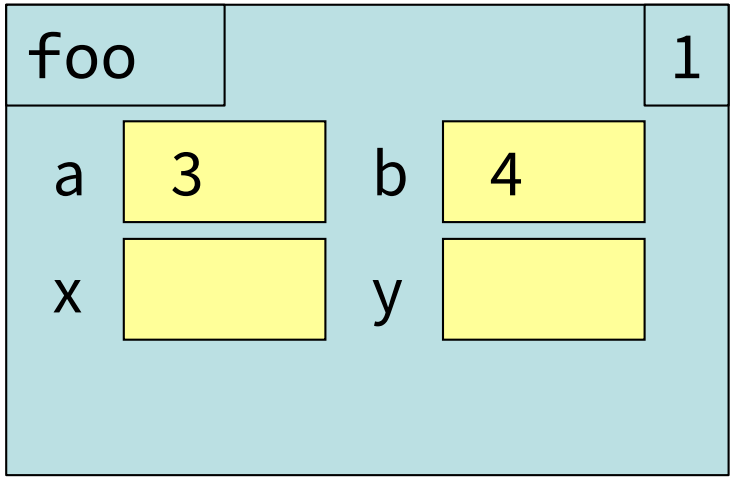

Exercise #2

Function Definition

```
def foo(a,b):
    x = a
    y = b
    return x*y+y
```

Function Call

```
>>> foo(3,4)
```

B:

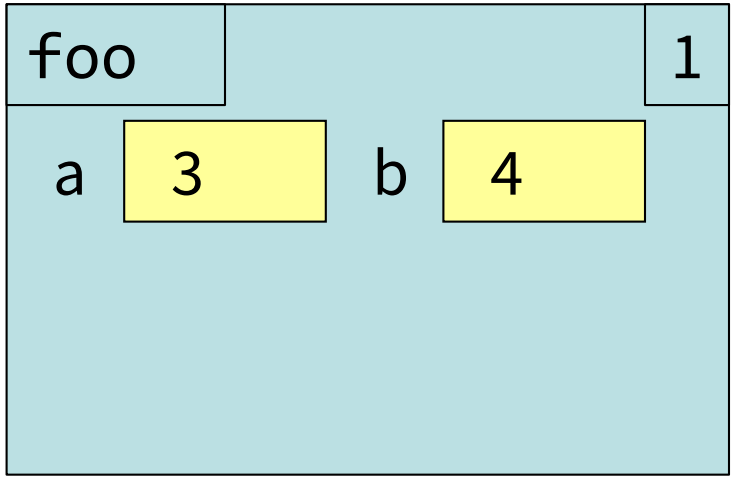

What is the next step?

Which One is Closest to Your Answer?

A:

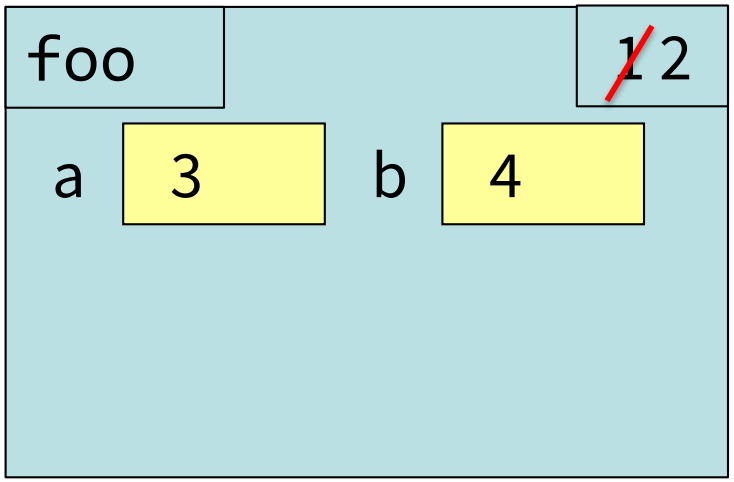

B:

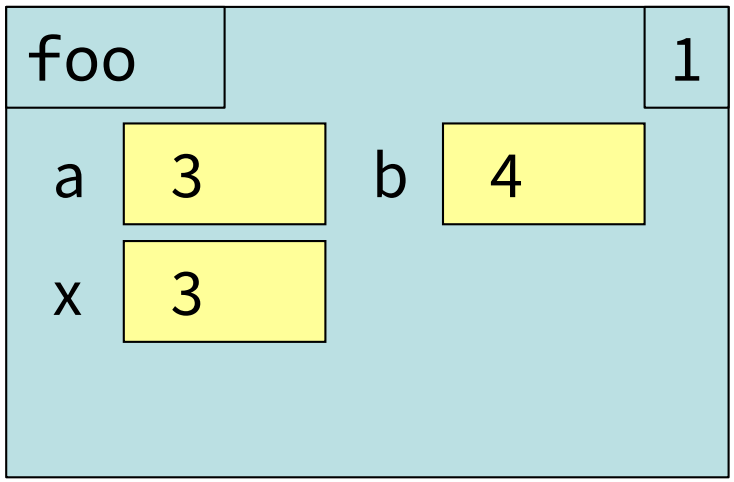

C:

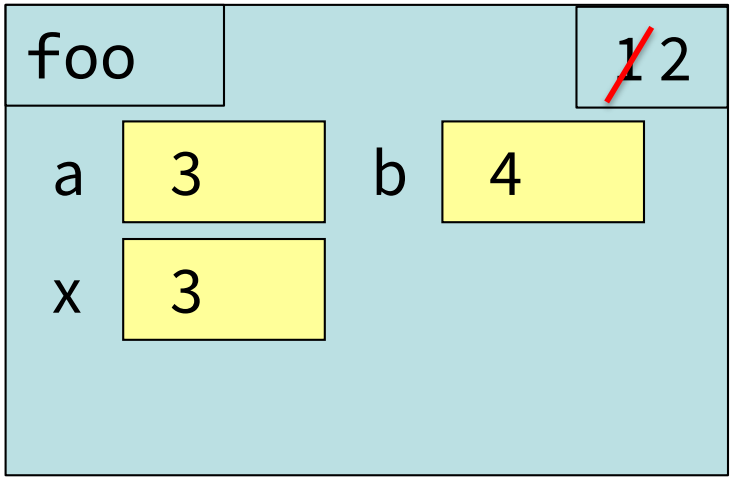

D:

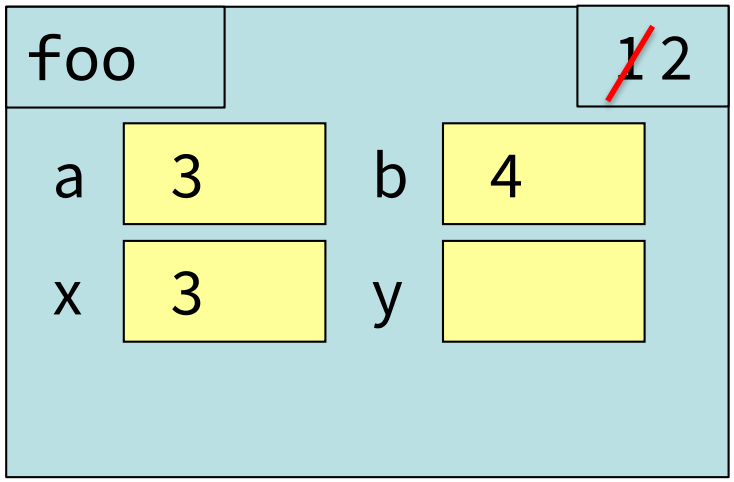

And the answer is…

A:

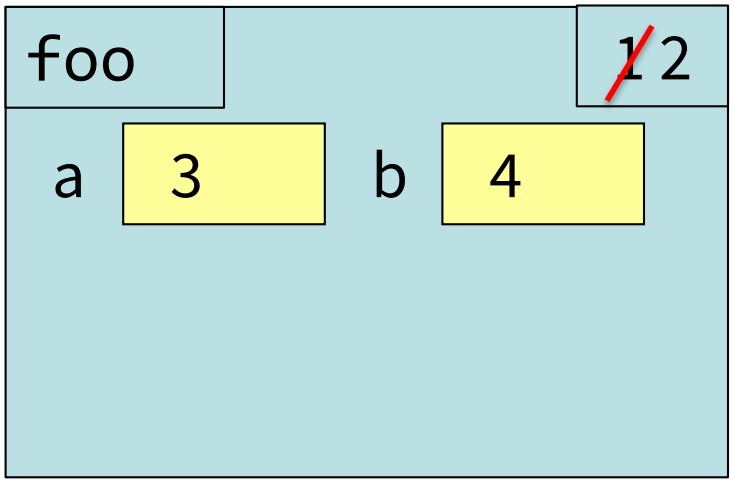

B:

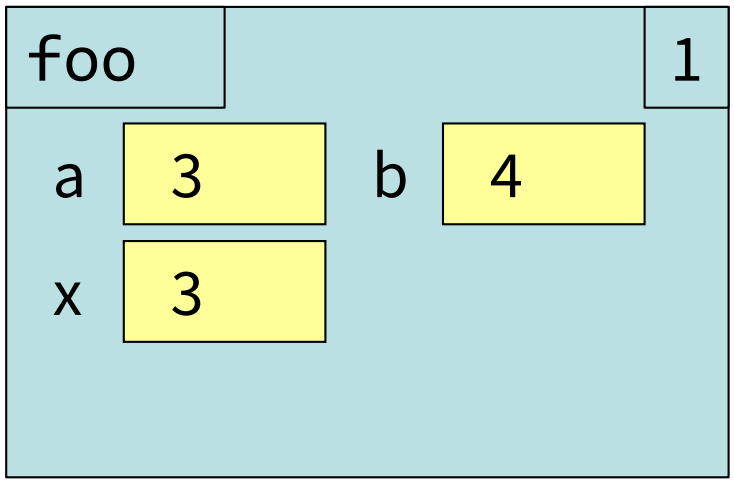

C:

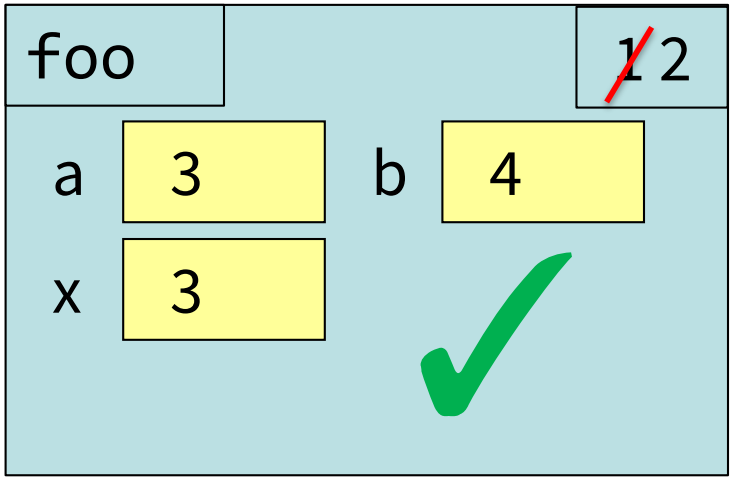

D:

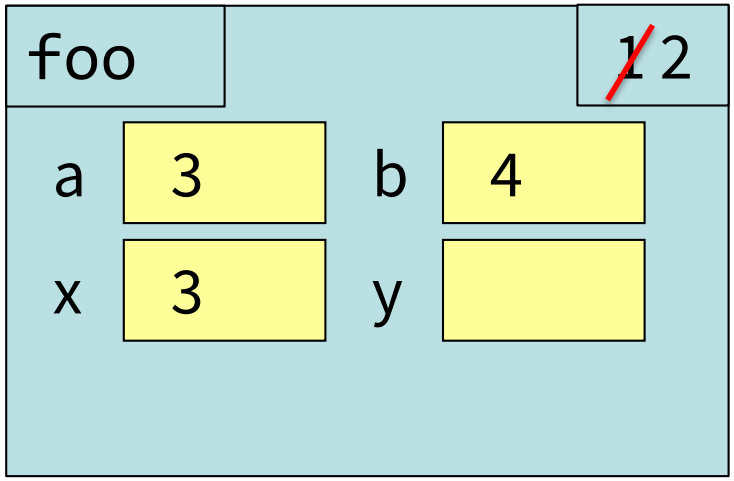

Exercise Time *(no poll, just discuss)*

Function Definition

```
def foo(a,b):
    x = a
    y = b
    return x*y+y
```

Function Call

```
>>> foo(3,4)
```

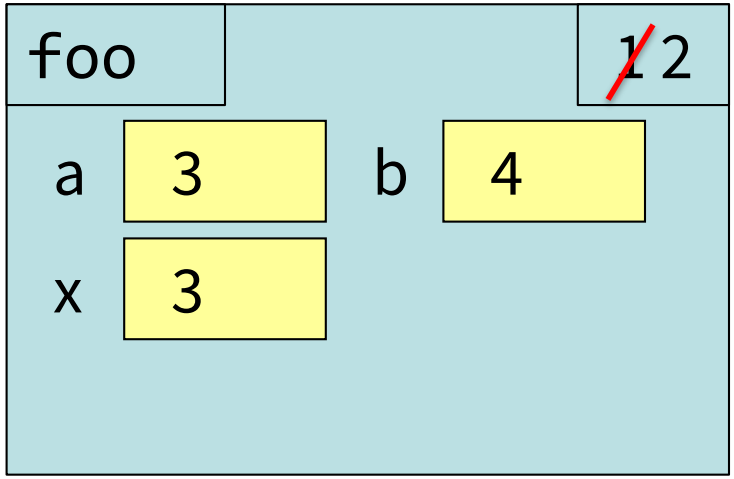

What is the next step?

Exercise #3

Function Definition

```
def foo(a,b):
    x = a
    y = b
    return x*y+y
```

Function Call

```
>>> foo(3,4)
```

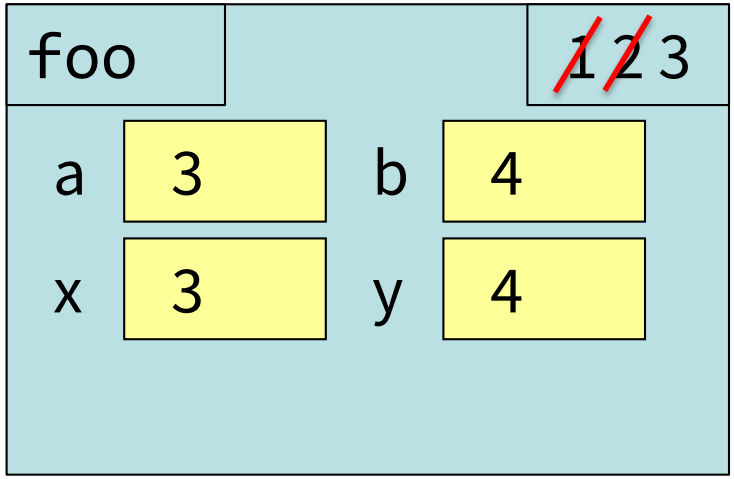

What is the next step?

Which One is Closest to Your Answer?

A:

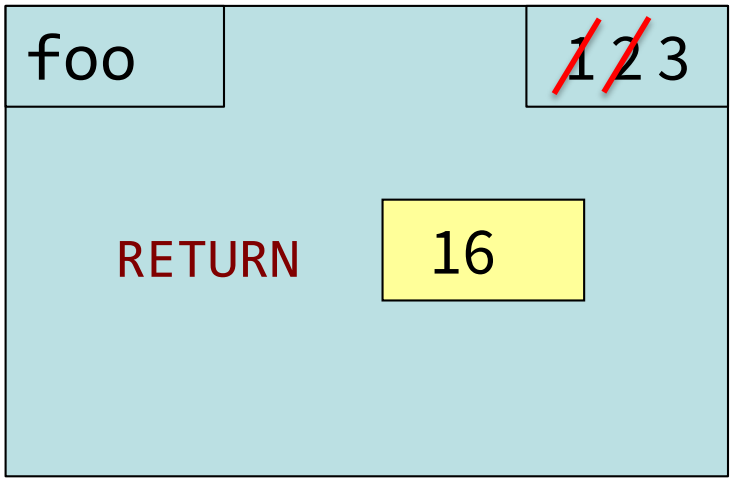

B:

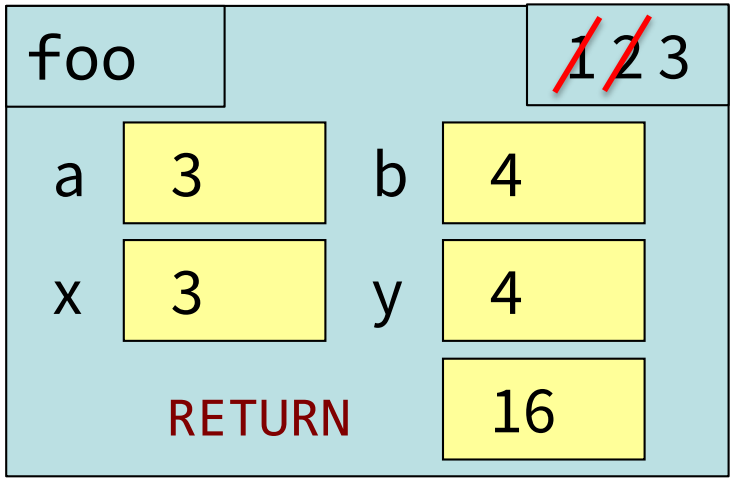

C:

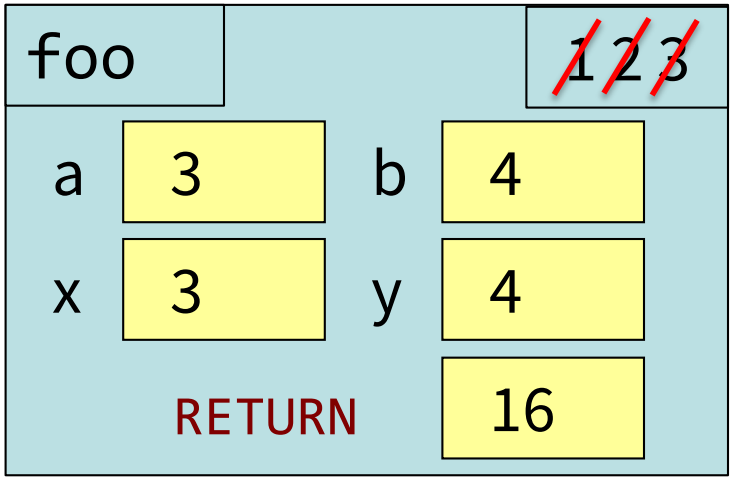

D:

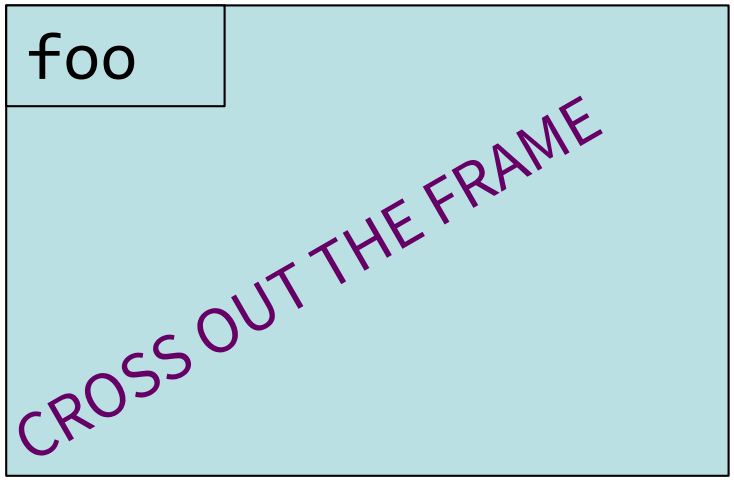

And the answer is…

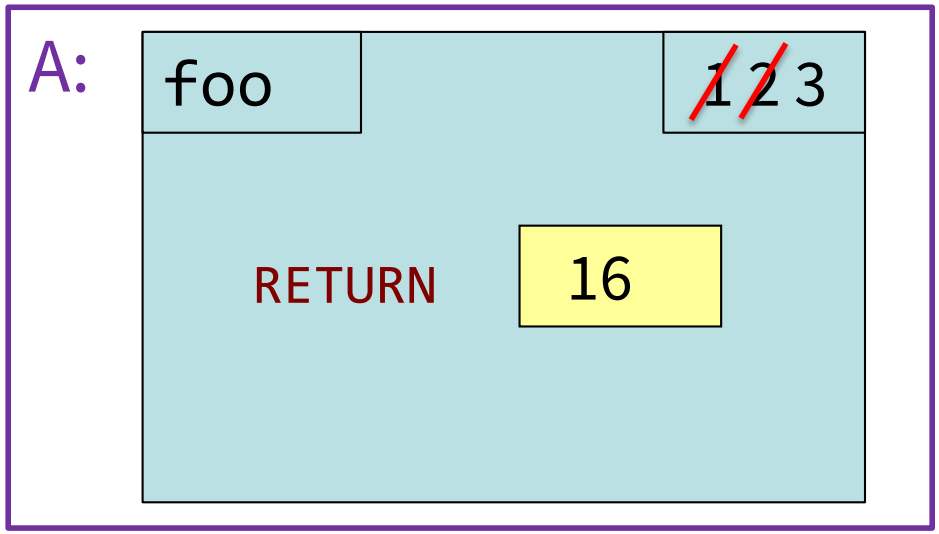

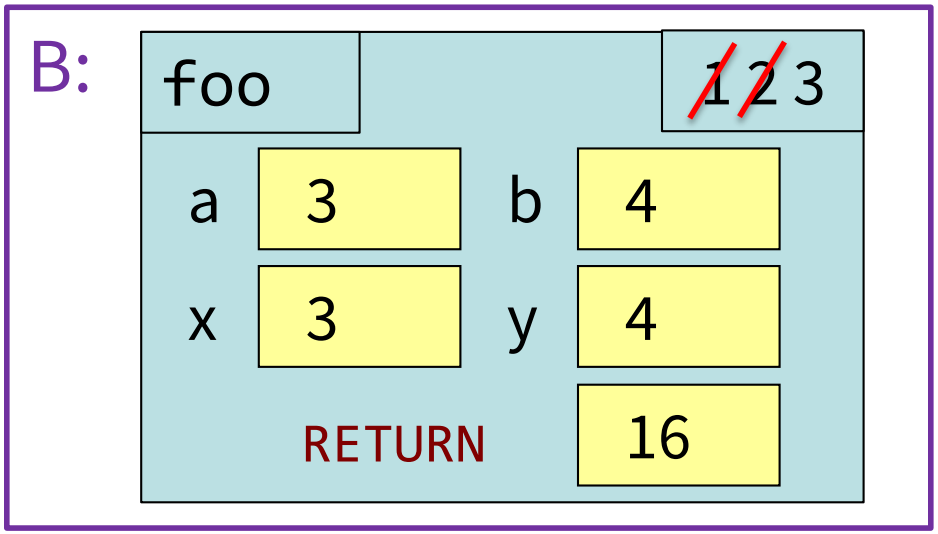

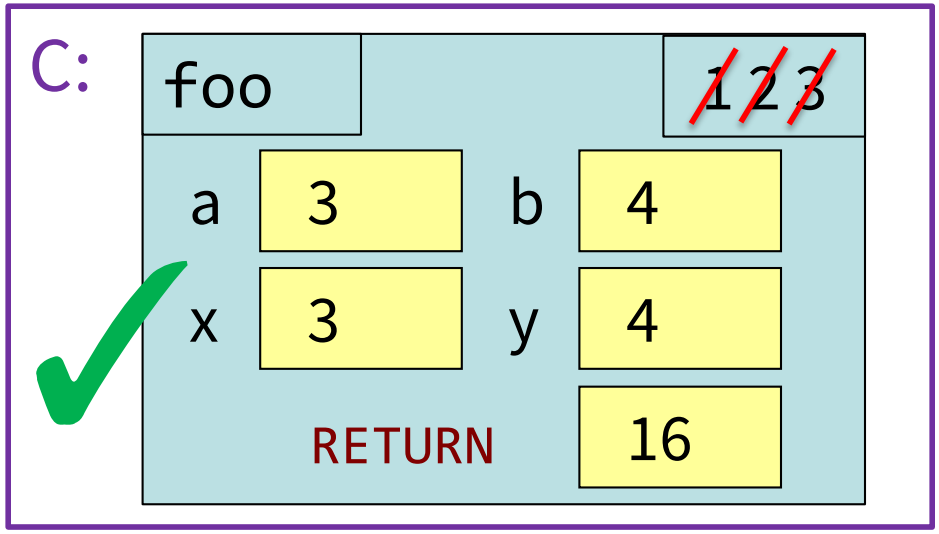

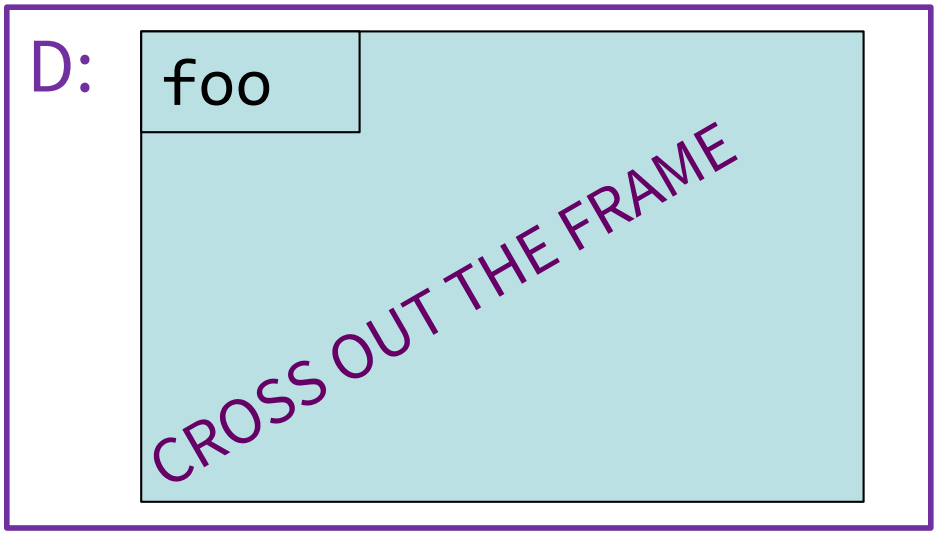

Use Python Tutor to help visualize

Lots of code for today:

https://www.cs.cornell.edu/courses/cs1110/2022sp/schedule/lecture/lec04/lec04.html

Paste it into the Python Tutor (http://cs1110.cs.cornell.edu/tutor/#mode=edit)

- Visualize the code as is
- Change the code
  - Try something new!
  - Insert an error! (misspell **`ht_in_inches`** or **`feet`**)
- Visualize again and see what is different

Call Frames and Global Variables

```
# bad_swap.py
def swap(a,b):
    """Bad attempt at swapping
  globals a & b"""
    tmp = a
    a = b
    b = tmp

a = 1
b = 2
swap(a,b)
```

Question: Does this work?

What exactly gets swapped with function **swap**?

Paste this into the Python Tutor and see for yourself!

More Exercises (1)

Module Text

```
# my_module.py

def foo(x):
    return x+1

x = 1+2
x = 3*x
```

Python Interactive Mode

```
>>> import my_module
>>> my_module.x
…
```

What does Python give me?

A: 9
B: 10
C: 1
D: Nothing
E: Error

More Exercises (1)

Module Text

```
# my_module.py

def foo(x):
    return x+1

x = 1+2
x = 3*x
```

Python Interactive Mode

```
>>> import my_module
>>> my_module.x
…
```

What does Python give me?

A: 9 CORRECT
B: 10
C: 1
D: Nothing
E: Error

More Exercises (2)

Function Definition

```
# silly.py

def foo(a,b):
    x = a
    y = b
    return x*y+y
```

Function Call

```
>>> import silly
>>> x = 2
>>> foo(3,4)
>>> x
…
```

What does Python give me?

A: 2
B: 3
C: 16
D: Nothing
E: I do not know

More Exercises (2)

Function Definition

```
# silly.py

def foo(a,b):
    x = a
    y = b
    return x*y+y
```

Function Call

```
>>> import silly
>>> x = 2
>>> foo(3,4)
>>> x
…
```

What does Python give me?

A: 2 CORRECT
B: 3
C: 16
D: Nothing
E: I do not know

More Exercises (3)

Module Text

```
# module.py

def foo(x):
    x = 1+2
    x = 3*x
```

Python Interactive Mode

```
>>> import module
>>> module.x
…
```

What does Python give me?

A: 9
B: 10
C: 1
D: Nothing
E: Error

More Exercises (3)

Module Text

```
# module.py

def foo(x):
    x = 1+2
    x = 3*x
```

Python Interactive Mode

```
>>> import module
>>> module.x
…
```

What does Python give me?

A: 9
B: 10
C: 1
D: Nothing
E: Error CORRECT

More Exercises (4)

Module Text

```
# module.py

def foo(x):
    x = 1+2
    x = 3*x

x = foo(0)
```

Python Interactive Mode

```
>>> import module
>>> module.x
…
```

What does Python give me?

A: 9
B: 10
C: 1
D: Nothing
E: Error

More Exercises (4)

Module Text

```
# module.py

def foo(x):
    x = 1+2
    x = 3*x

x = foo(0)
```

Python Interactive Mode

```
>>> import module
>>> module.x
…
```

What does Python give me?

A: 9
B: 10
C: 1
D: Nothing CORRECT
E: Error

More Exercises (5)

Module Text

```
# module.py

def foo(x):
    x = 1+2
    x = 3*x
    return x+1

x = foo(0)
```

Python Interactive Mode

```
>>> import module
>>> module.x
…
```

What does Python give me?

A: 9
B: 10
C: 1
D: Nothing
E: Error

More Exercises (5)

Module Text

```
# module.py

def foo(x):
    x = 1+2
    x = 3*x
    return x+1

x = foo(0)
```

Python Interactive Mode

```
>>> import module
>>> module.x
…
```

What does Python give me?

A: 9
B: 10 CORRECT
C: 1
D: Nothing
E: Error