Lecture 1: Buffer Overflows

CS 5431 January 27, 2017

Once Upon a Time…

Microsoft Store Products Support 0 Sign in

Search for help

Manage my account Ask the community Contact us Find downloads

MS08-067: Vulnerability in Server service could allow remote code execution

Email
Print

Memory: A Quick Review

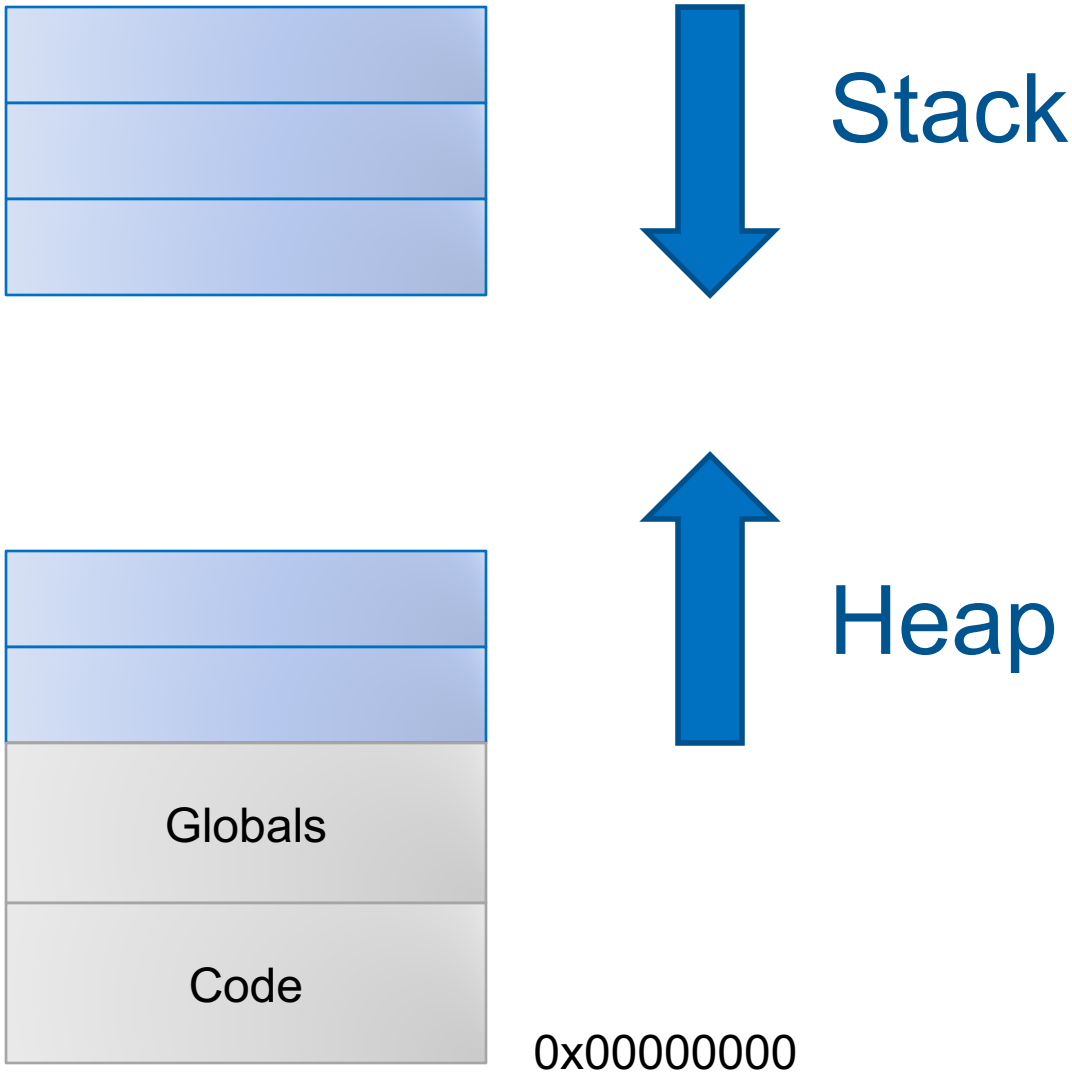

The Stack

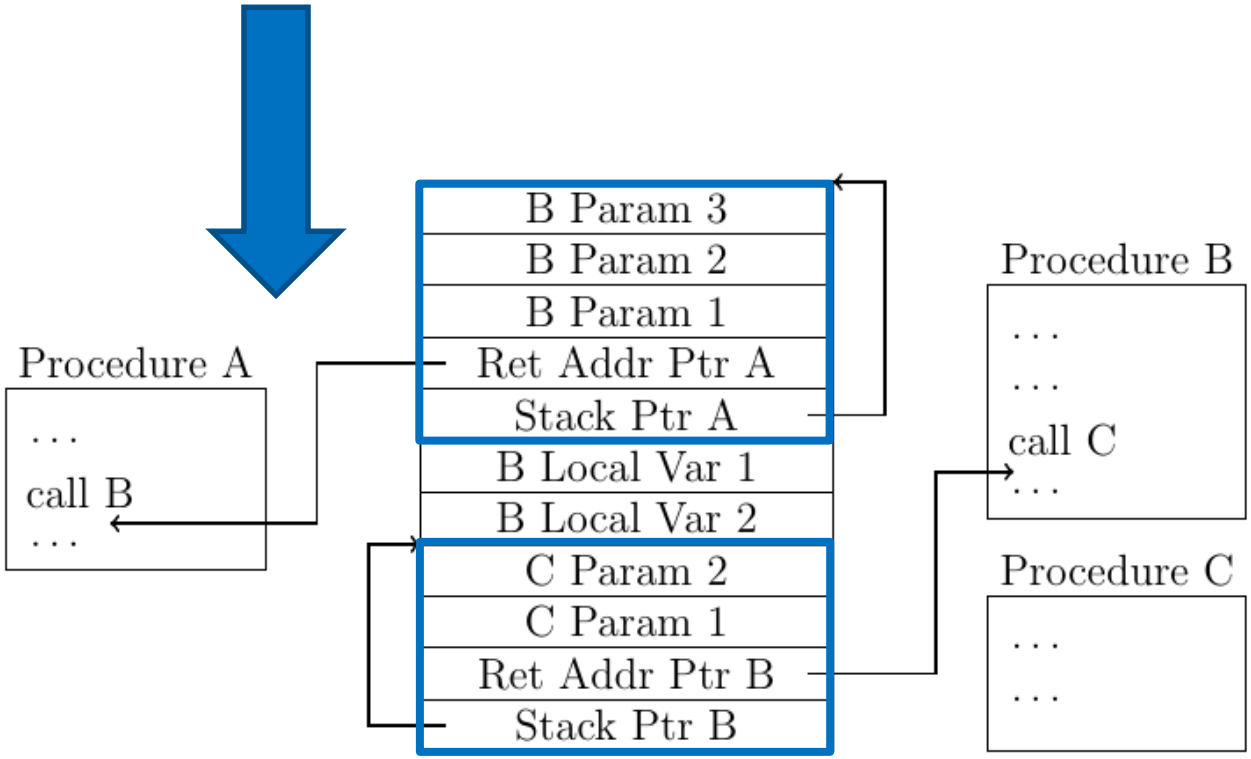
B Param 3
B Param 2
B Param 1
Ret Addr Ptr A
Stack Ptr A
B Local Var 1
B Local Var 2
C Param 2
C Param 1
Ret Addr Ptr B
Stack Ptr B
Procedure A
...
call B
...
Procedure B
...
...
call C
...
Procedure C
...
...

Buffer Overflows

Stack Smashing

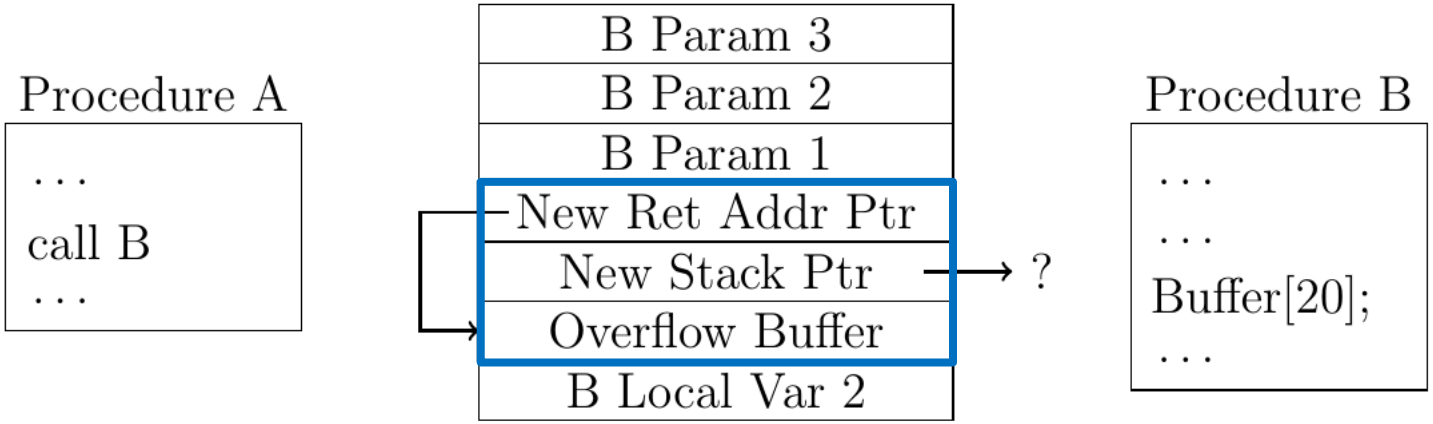

Canaries

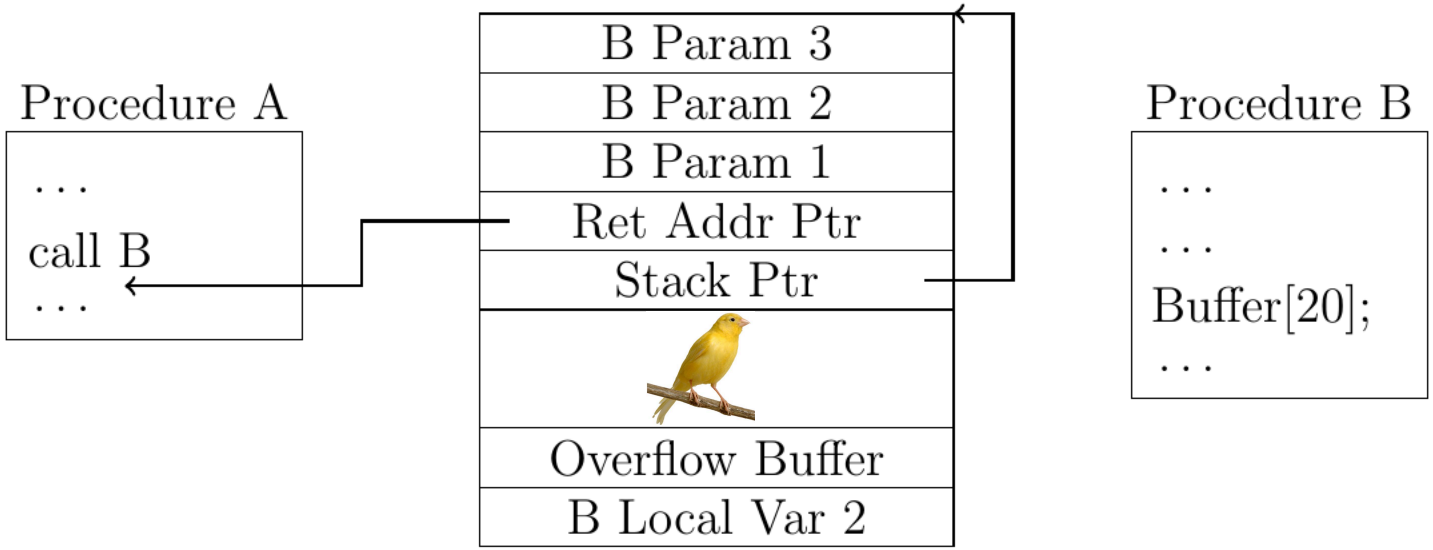
Procedure A
...
call B
...
B Param 3
B Param 2
B Param 1
Ret Addr Ptr
Stack Ptr
Overflow Buffer
B Local Var 2
Procedure B
...
...
Buffer[20];
...

Memory: A Quick Review

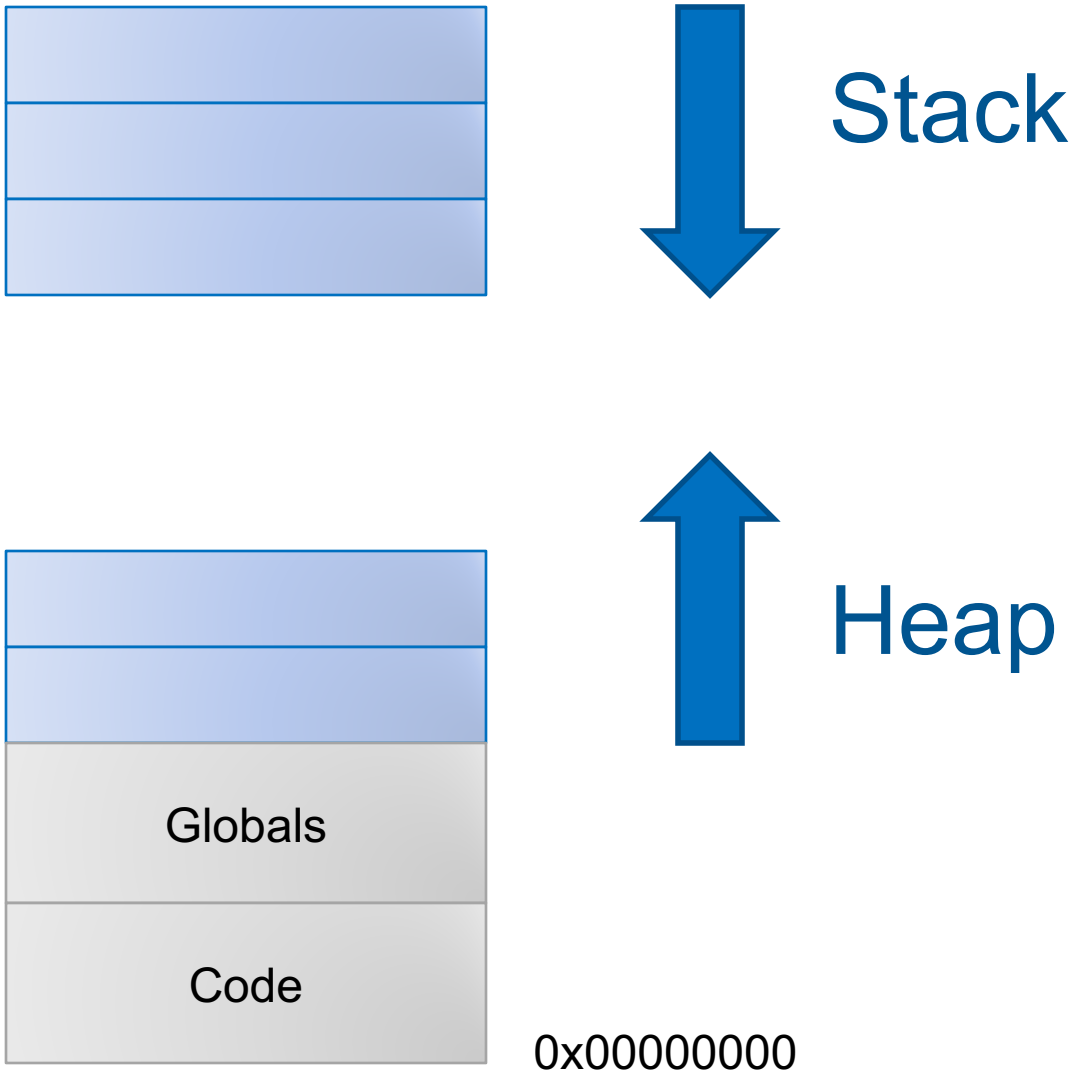

The Heap

```
INTERNAL_SIZE_T prev_size;     /* size of prev chunk (if free) */
INTERNAL_SIZE_T size;          /* size of chunk  */

struct chunk * fd;             /* double links -- used only if free */
struct chunk * bw;
```

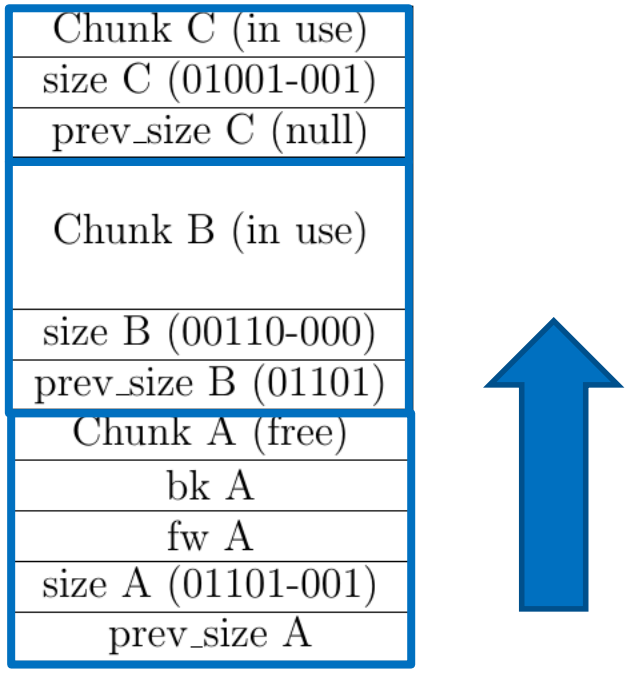

Heap Smashing

```
INTERNAL_SIZE_T prev_size;    /* size of prev chunk (if free) */
INTERNAL_SIZE_T size;         /* size of chunk  */

struct chunk * fd;            /* double links -- used only if free */
struct chunk * bw;
```

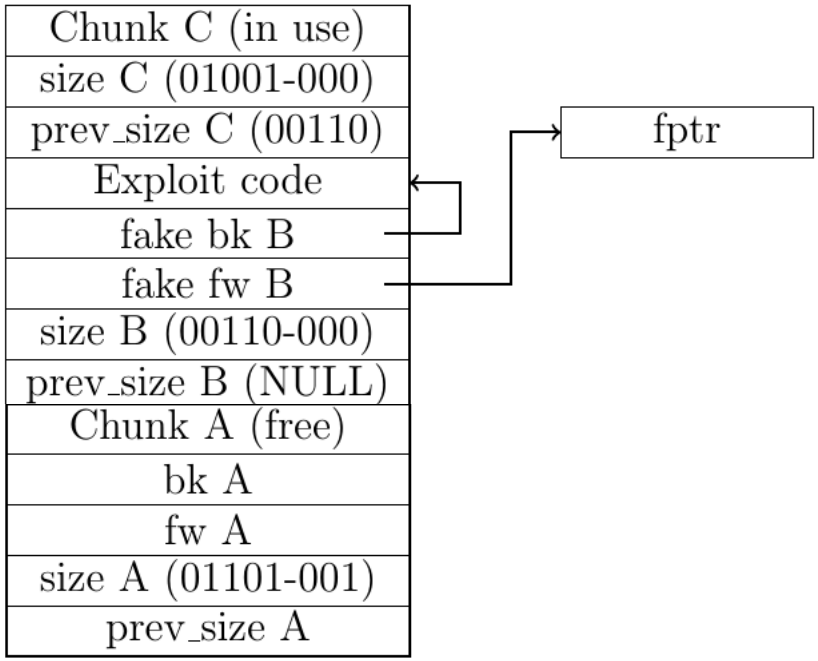

Memory Tagging

Return-into-libc

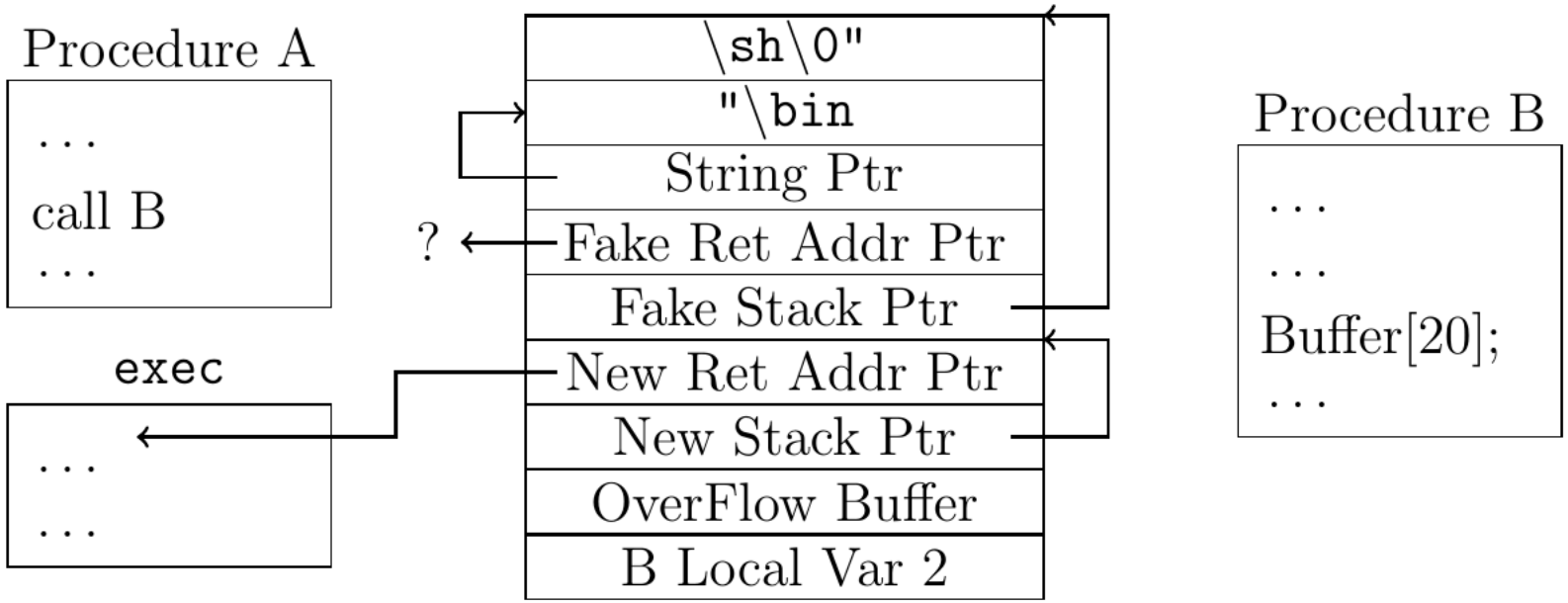

Address Space Layout Randomization

Language Support

```
int a[20];
for(int i=0; i<max; i++){
    a[i]=0;
}
```

```
int a[20];
for(int i=0;i<max;i++){
    if(i<0) signal error;
    if(i>=20) signal error;
    a[i]=0;
}
```

Why Buffer Overflows?

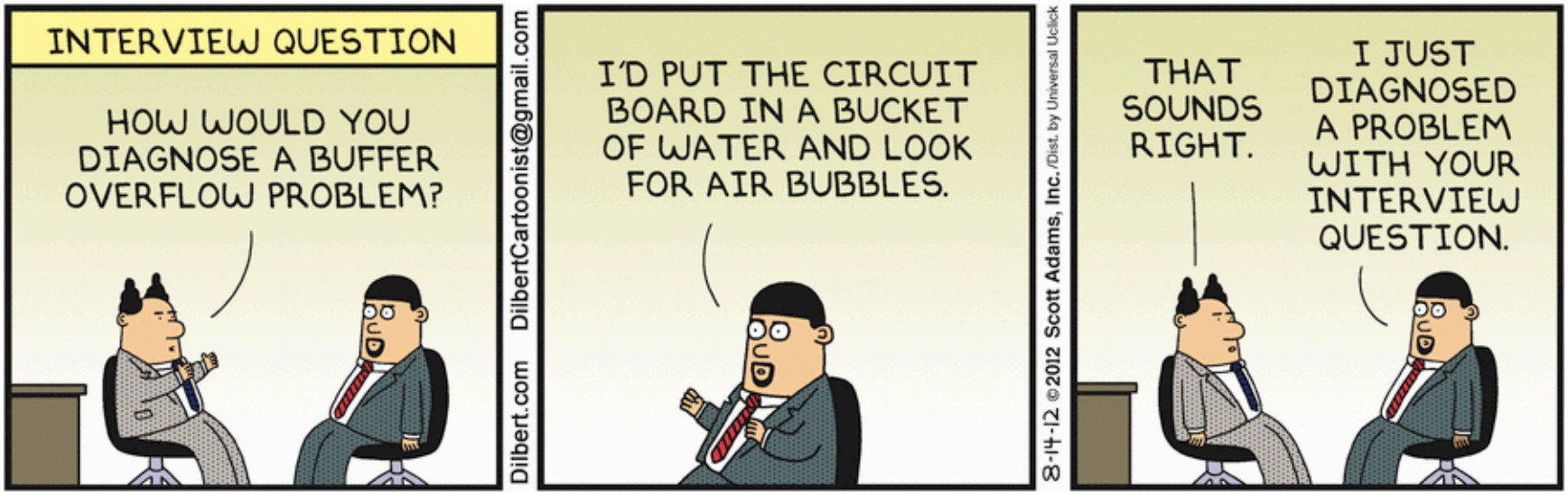

- Still a major problem
- Low level details can impact security
- Capabilities motivate threat models
- Example arms race

Course Logistics

- Class: F 10:10-11:25, Hollister 314
- Website: www.cs.cornell.edu/courses/5431/2017sp

- Instructor: Eleanor Birrell
  - eleanor@cs.cornell.edu
  - Gates Hall 441
  - Office Hourse: M 4-6pm

Practicum = Course Project

- Build and secure a software system (with non-trivial security functionality)
- You choose and design your system!
  - Authentication. The system must authenticate its clients (humans, machines, and/or programs). Might include user registration, passwords, two-factor, generation of secrets, distribution of keys, etc.
  - Authorization. The system must enforce some authorization policy to control some subset of its operation.
  - Audit. The system must provide infrastructure for audit or other means of establishing accountability for actions.
  - Confidentiality and Integrity. The system must involve information that resides in long-term storage or that is transmitted over a network. The system's mission must require that information to be kept secret and/or be protected from corruption.

tldr;

If it has:

1) More than one computer
2) More than one user
3) Some data somebody cares about

then it is probably ok

Project Schedule

- Six Project Milestones
  - Milestone 0: Charter — Due: February 8
  - Milestone 1: Security Goals — Due: February 17
  - Milestone 2: Prototype — Due: March 8
  - Milestone 3: Authentication — Due: March 22
  - Milestone 4: Authorization — Due: April 28
  - Milestone 5: Final — Due: May 10
- Demos: Milestone 2, Milestone 3, Milestone 4
- Final Project Presentations

Conficker, again