CS 4700: Foundations of Artificial Intelligence

Spring 2020
Prof. Haym Hirsh

Lecture 30
April 24, 2020

ONLINE

Backup plans:

If this Zoom meeting ends prematurely,
five-minute break, check Piazza

General Case: Abstract Representation of a Neuron

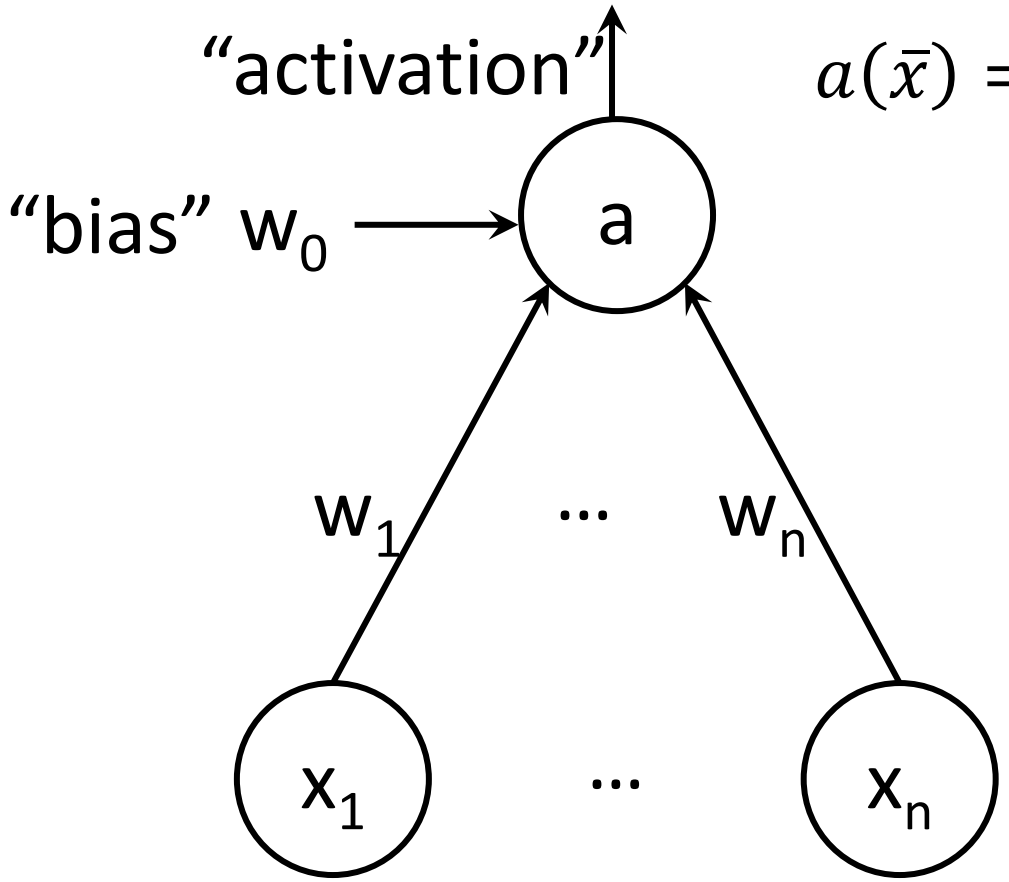

$$a(\bar{x}) = g(\bar{w} \cdot \bar{x})$$

General Case: Abstract Representation of a Neuron

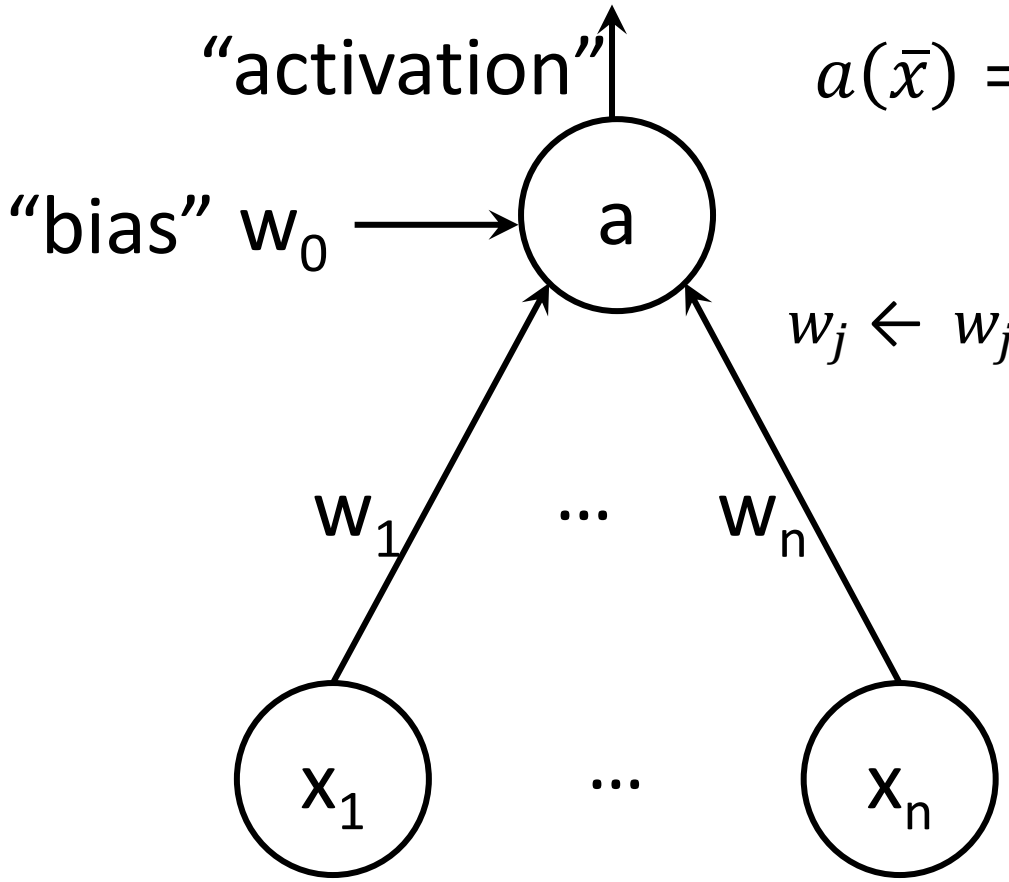

$$a(\bar{x}) = g(\bar{w} \cdot \bar{x})$$

$$w_j \leftarrow w_j + \alpha\, g'(\bar{w} \cdot \bar{x})\,(y_i - g(\bar{w} \cdot \bar{x}))x_{ij}$$

Multi-Layer Neural Network

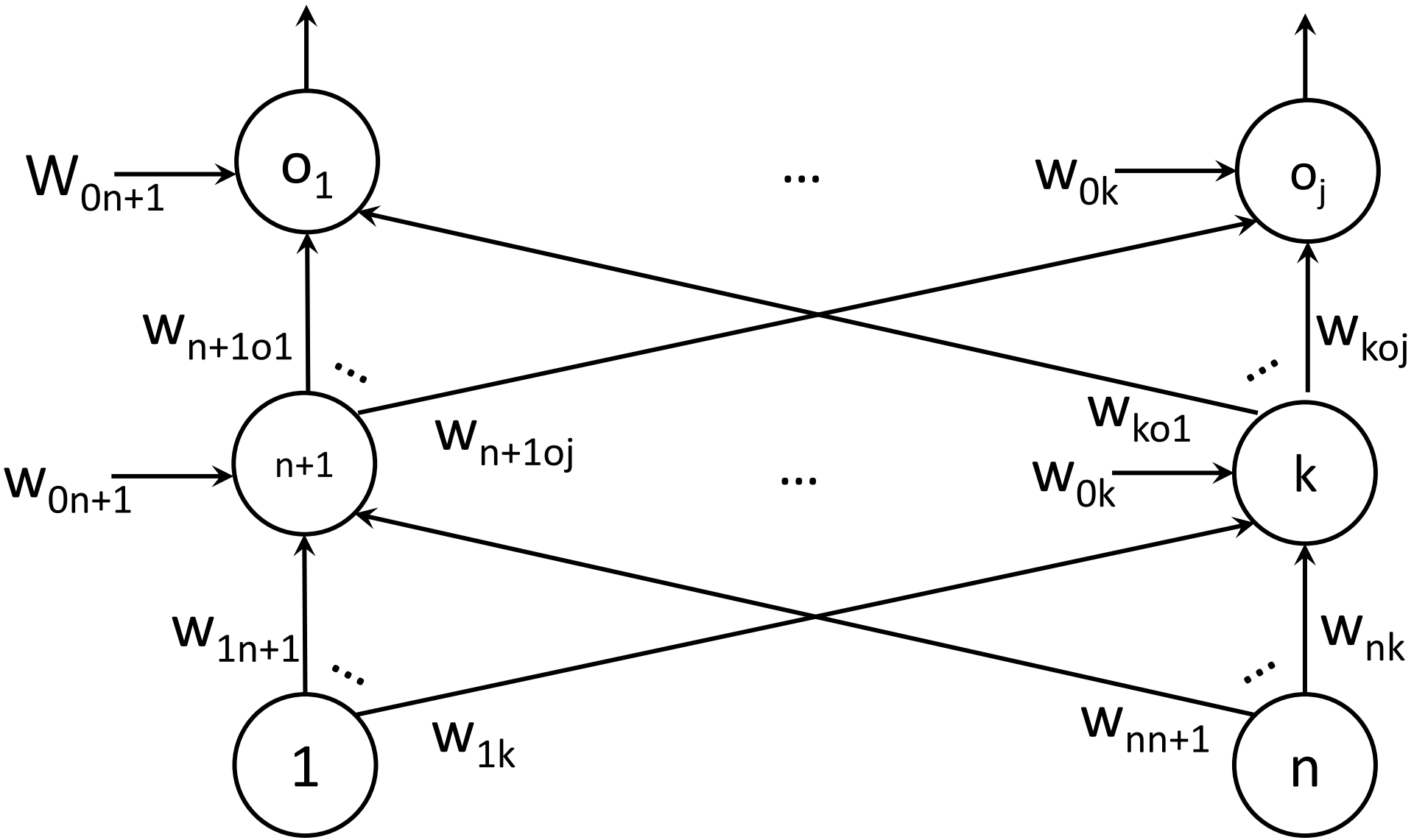

Multi-Layer Neural Network

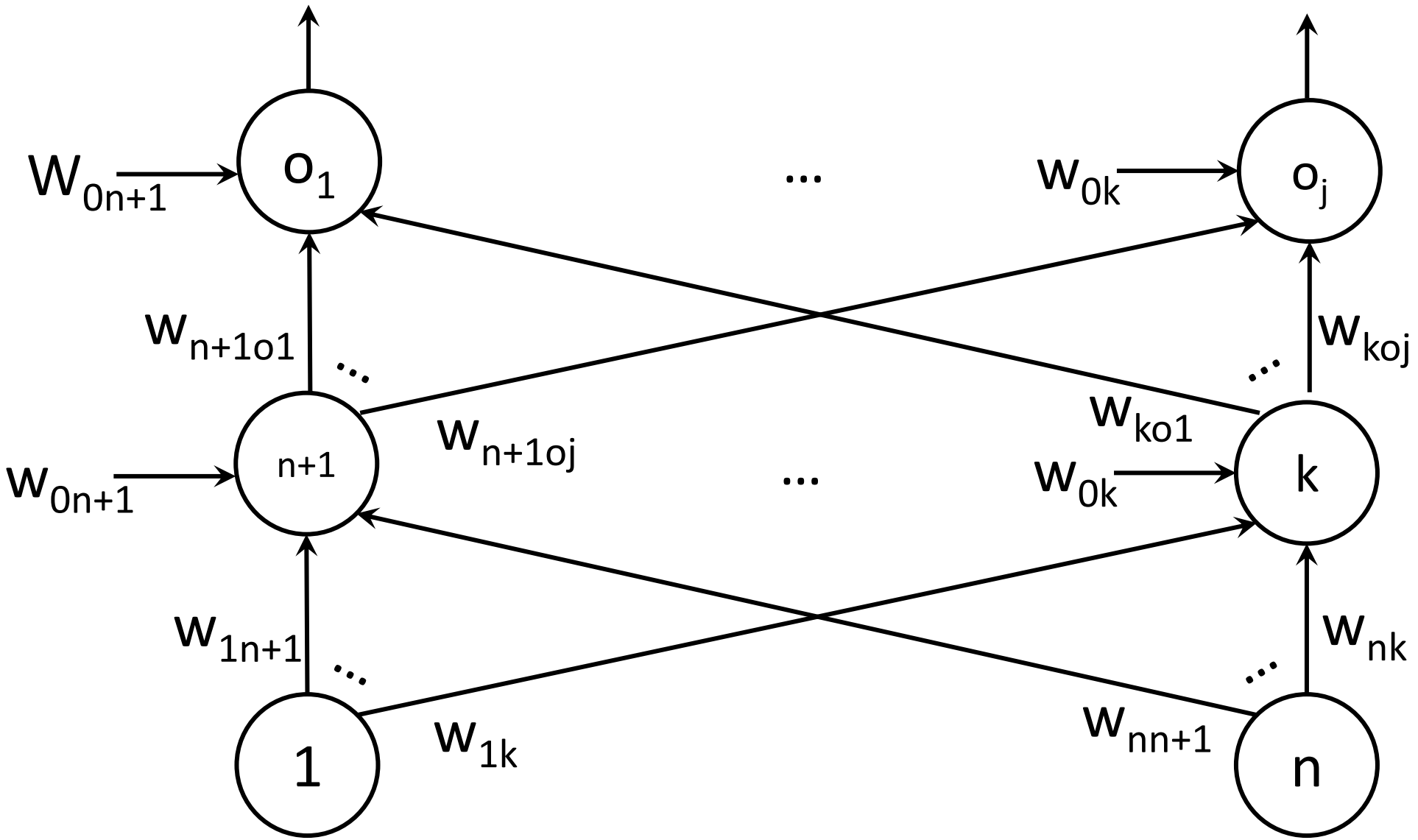

Can have arbitrary number of layers

Multi-Layer Neural Network

- Increases our "representational power"

- Learning the weights requires something different

  Can compute the derivative of $\frac{\partial}{\partial w_{ij}} \text{Error}_D(\overline{w})$ for each w_{ij}

  Computing $\frac{\partial}{\partial w_{ij}} \text{Error}_D(\overline{w})$ is more complex for lower levels

Multi-Layer Neural Network

- Increases our "representational power"

- Learning the weights requires something different

Can compute the derivative of $\frac{\partial}{\partial w_{ij}} \text{Error}_D(\overline{w})$ for each w_{ij}

Computing $\frac{\partial}{\partial w_{ij}} \text{Error}_D(\overline{w})$ is more complex for lower levels

Harness the chain rule

Using Chain Rule for Learning

$$f(x) = g\big(h(x)\big)$$

$$f'(x) = g'\big(h(x)\big)h'(x)$$

Using Chain Rule for Learning

$$f(x) = g\big(h(x)\big)$$

$$f'(x) = g'\big(h(x)\big)h'(x)$$

Neural net version: neuron *z* with *k* input neurons $a_1(w_{ij}), \dots, a_k(w_{ij})$

$$a_z(w_{ij}) = g\left(\sum_{l=1}^{k} w_{lz} a_l(w_{ij})\right)$$

Explanatory note given question from lecture:

I'm writing these as a function of w_{ij} rather than of $\bar{w} \cdot \bar{x}$ because we're taking the partial derivative with respect to w_{ij} and, rather than writing $\frac{\partial}{\partial w_{ij}}$ everywhere, I'm showing that this partial derivative treats w_{ij} as the only variable and treats the other weights in $\bar{w} \cdot \bar{x}$ as constants. This lets us write derivatives as, for example, $a_z{}'(w_{ij})$ rather than $\frac{\partial}{\partial w_{ij}}(\bar{w} \cdot \bar{x})$.

Neural net version: neuron *z* with *k* input neurons $a_1(w_{ij}), \ldots, a_k(w_{ij})$

$$a_z(w_{ij}) = g\left(\sum_{l=1}^{k} w_{lz} a_l(w_{ij})\right)$$

Using Chain Rule for Learning

$$f(x) = g\big(h(x)\big)$$

$$f'(x) = g'\big(h(x)\big)h'(x)$$

Neural net version: neuron *z* with *k* input neurons $a_1(w_{ij}), \dots, a_k(w_{ij})$

$$a_z(w_{ij}) = g\left(\sum_{l=1}^{k} w_{lz} a_l(w_{ij})\right)$$

$$a_z{}'(w_{ij}) = g'\left(\sum_{l=1}^{k} w_{lz} a_l(w_{ij})\right)\left(\sum_{l=1}^{k} w_{lz} a_l{}'(w_{ij})\right)$$

Using Chain Rule for Learning

$$a_z{}'(w_{ij}) = g'\left(\sum_{l=1}^{k} w_{lz} a_l(w_{ij})\right)\left(\sum_{l=1}^{k} w_{lz} a_l{}'(w_{ij})\right)$$

Using Chain Rule for Learning

$$a_z{}'(w_{ij}) = g'\left(\sum_{l=1}^{k} w_{lz} a_l(w_{ij})\right)\left(\sum_{l=1}^{k} w_{lz} a_l{}'(w_{ij})\right)$$

Computed in order to generate top-level output

Using Chain Rule for Learning

$$a_z{}'(w_{ij}) = g'\left(\sum_{l=1}^{k} w_{lz} a_l(w_{ij})\right)\left(\sum_{l=1}^{k} w_{lz} a_l{}'(w_{ij})\right)$$

If $g'(z) = g(z)\big(1 - g(z)\big)$ or $g'(z) = \big(1 - g^2(z)\big)$

$g(z)$ is computed in order to generate top-level output

Using Chain Rule for Learning

$$a_z{}'(w_{ij}) = g'\left(\sum_{l=1}^{k} w_{lz} a_l(w_{ij})\right)\left(\sum_{l=1}^{k} w_{lz} a_l{}'(w_{ij})\right)$$

Same is true recursively

Backpropagation Algorithm Outline

1. Compute the network's outputs starting from inputs and moving upward.

2. Compute the weight updates starting from the outputs and moving downwards.

Backprop: Notation

- *k* layers
- Each neuron is labeled by 1, 2, …
- Neurons in layer l denoted by L_l
- Input layer: Layer 1, $L_l = \{1, \dots, n\}$, and $a_j = x_j$
- Output layer: Layer *k*, L_k
- Weight between neuron *i* and *j*: w_{ij}
- Bias weight for neuron *j*: w_{0j}
- Matrix of weights: W (only a subset are really weights)
- Δ_i: Corresponds to $(y_i - g(\overline{w} \cdot \bar{x}_i))$ for internal neurons

Backprop: High Level

```
Backprop(D,W):
    Initialize all weights w_ij to small random numbers
    Repeat
        For each example (x̄, ȳ)
            Feedforward:
                For m=2 to k
                    Compute the activations for neurons at level m from those at level m-1
            Backpropagation:
                For m=k down to 2
                    Compute new weights for neurons between levels m-1 and m
                        using "gradient descent"
    Until <stopping criterion>
```

Backprop: High Level

```
Backprop(D,W):
    Initialize all weights w_ij to small random numbers
    Repeat
        For each example (x̄, ȳ)
            Feedforward:
                For m=2 to k
                    Compute the activations for neurons at level m from those at level m-1
            Backpropagation:
                For m=k down to 2
                    Compute new weights for neurons between levels m-1 and m
                        using "gradient descent"
    Until <stopping criterion>
```

Backprop: Feedfoward

For m = 2 to k

For each node j in L_m

$$in_j \leftarrow \sum_{\substack{\text{node } i \\ \text{into } j}} w_{ij} a_i$$

$$a_j \leftarrow g(in_j)$$

Backprop: High Level

```
Backprop(D,W):
    Initialize all weights w_ij to small random numbers
    Repeat
        For each example (x̄, ȳ)
            Feedforward:
                For m=2 to k
                    Compute the activations for neurons at level m from those at level m-1
            Backpropagation:
                For m=k down to 2
                    Compute new weights for neurons between levels m-1 and m
                        using "gradient descent"
    Until <stopping criterion>
```

Backprop: Backpropagation

For each node j in L_k

$$\Delta_j \leftarrow g'(in_j)(y_j - a_j)$$

For m = *k-1* down to 2

For each node i in L_m

$$\Delta_i \leftarrow g'(in_i) \sum_{\substack{\text{node } j \\ \text{out of } i}} w_{ij}\Delta_j$$

For each weight w_{ij}

$$w_{ij} \leftarrow w_{ij} + \alpha\, a_i\, \Delta_j$$

Backprop: High Level

```
Backprop(D,W):
    Initialize all weights w_ij to small random numbers
    Repeat
        For each example (x̄, y)
            Feedforward:
                For m=2 to k
                    Compute the activations for neurons at level m from those at level m-1
            Backpropagation:
                For m=k down to 2
                    Compute new weights for neurons between levels m-1 and m
                        using "gradient descent"
     Until <stopping criterion>
```