CS4620 Fall 2012
HW1 - Transforms and Hierarchies

Due: Sept 19 2012 (2:30pm)

1 Change of Basis

We will transform a set of points and vectors between a different basis. Consider a frame f, with origin $(2, 0, 0)$, and the following axes:

$$(0, \frac{1}{\sqrt{2}}, \frac{1}{\sqrt{2}}), (0, -\frac{1}{\sqrt{2}}, \frac{1}{\sqrt{2}}), (1, 0, 0)$$

A) Compute the following world space entities in the frame f:

1. Point $(2, 0, 0)$
2. Point $(-2, 0, 0)$
3. Point $(0, 0, 0)$
4. Vector $(1, 0, 0)$
5. Vector $(0, 0, 1)$

B) Derive the matrix F that transforms from the frame f to the canonical frame. Double check that this matrix makes sense by checking how the points above behave.

2 Reflection Transform

In this problem we will derive the transformations required to do reflections. Assume that a scene has one infinite mirror, given by the plane equation $Ax + By + Cz + D = 0$. Remember that (A, B, C) is the normal to the plane. Assume the mirror is opaque and reflective on only one side. Assume you are given "primitive" reflection transformations (about canonical axes), and primitive rotations and translations (make it clear what you are assuming). Describe how R(A,B,C,D) can be expressed as a sequence of such primitive transformations, as well as deriving each of the matrices used. Draw a picture showing your scene and assumption.

3 Aligning Line Segments

Consider two line segments in 2D (homogeneous coordinates):
l_1 with end points $\mathbf{p}_1 = (-1, 3, 1)$, $\mathbf{p}_2 = (4, -2, 1)$, and
l_2 with end points $\mathbf{q}_1 = (3, 2, 1)$, $\mathbf{q}_2 = (6, 5, 1)$.

Find the 3-by-3 transformation matrix $\mathbf{M}$, that aligns l_1 with l_2. In other words, you have to find the transformation $\mathbf{M}$ (rotation + scale + translation), such that $\mathbf{M}\mathbf{p}_1 = \mathbf{q}_1$, and $\mathbf{M}\mathbf{p}_2 = \mathbf{q}_2$.

Hint: A good first step is to transform the endpoint or midpoint of l_1 to the origin. Then figure out a set of matrices; we have been able to do it in four to six matrices.

4 Hierarchical Transforms

Let A, B, C, and D be the squares as shown in (a). Compute the 3×3 2D matrices in the scene graph shown in (b), such that after performing the corresponding transformations, the scene becomes (c). Their centers are at a radius of 1 from the origin. In addition, your solution should satisfy the following constraints:

$$T_{tot} = I;$$
$$T_A = T_C;$$
$$T_B = T_D;$$

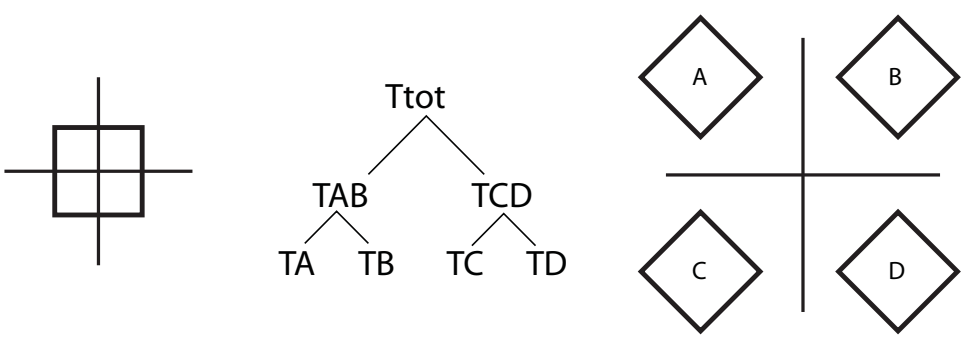

(a) (b) (c)