Architectural Support for Operating Systems

Operating Systems

CS 4410/4411

Cornell University

The slides are the product of many rounds of teaching CS 4410 by Professors Sirer, Bracy, George, and Van Renesse.

Basic Computer Organization

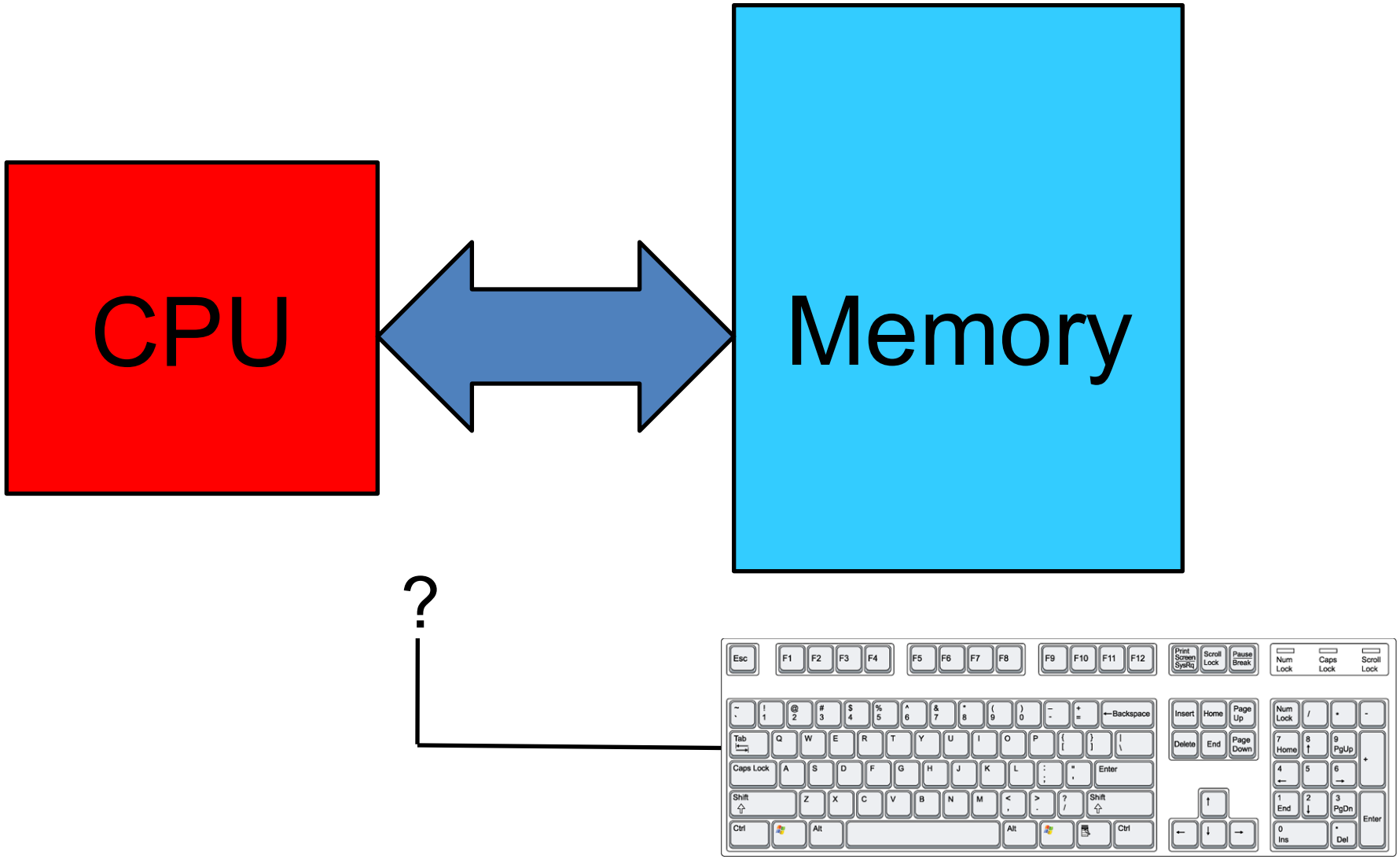

Keyboard (1)

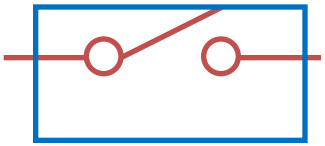

SPST

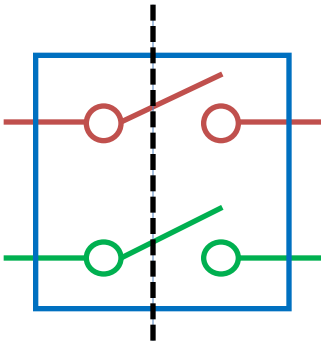

DPST

- Let's build a keyboard
- Reading input
  - Mechanical switches
  - Single pole, single throw
  - Double pole, single throw
- Digital processing
  - Encoders, decoders, muxes, latches, tristate buffers, logic gates, …

Keyboard (2)

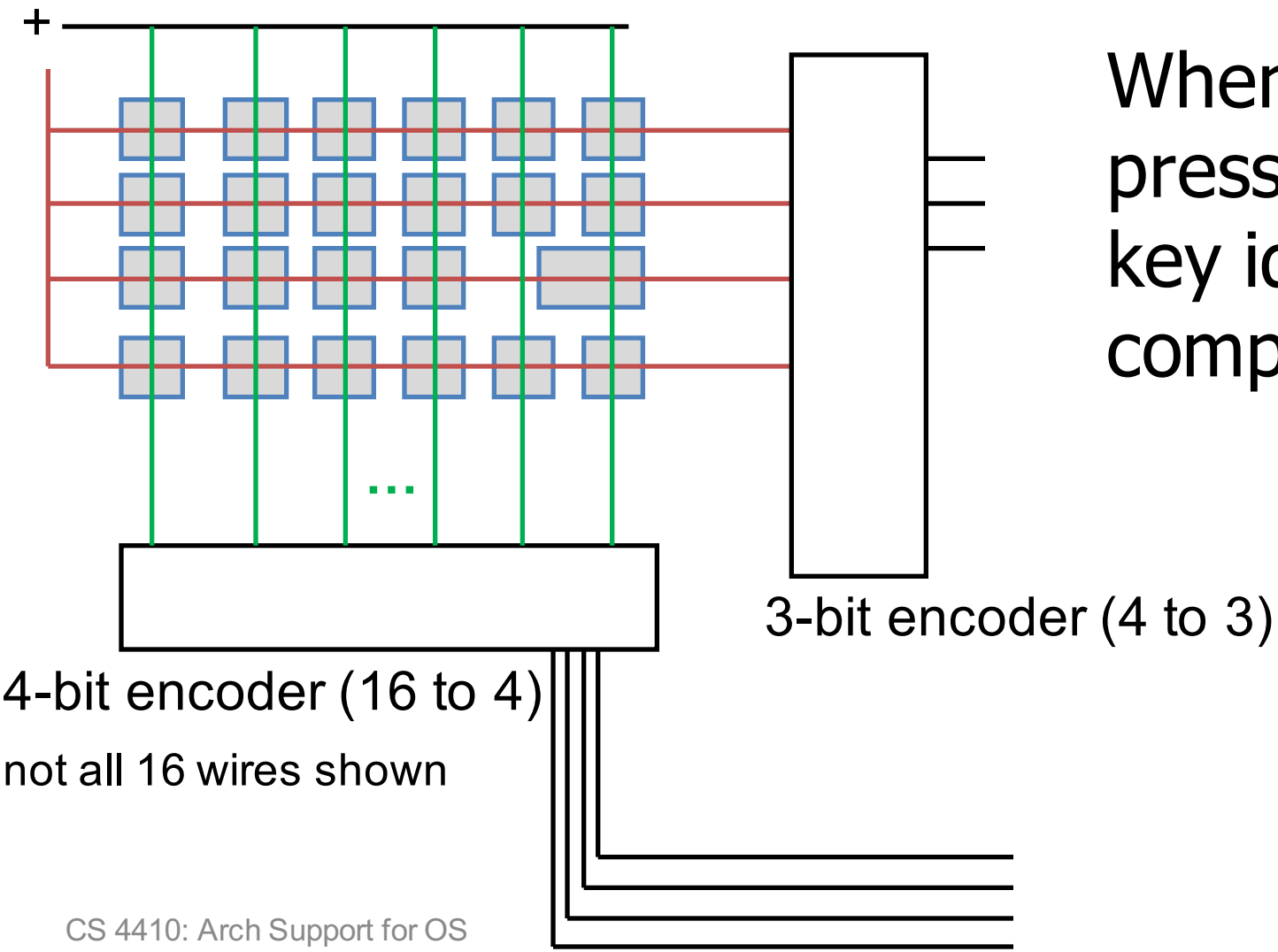

When a key is pressed, a 7-bit key identifier is computed

Keyboard (3)

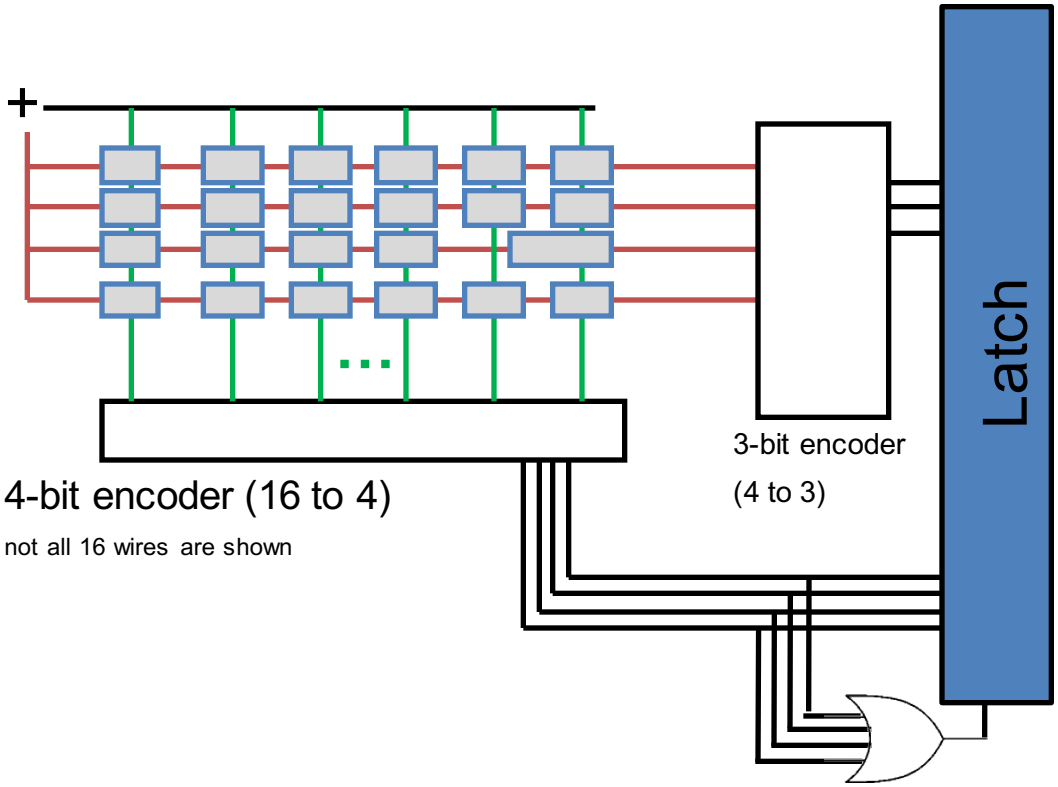

- A latch can store the keystroke indefinitely

Keyboard (4)

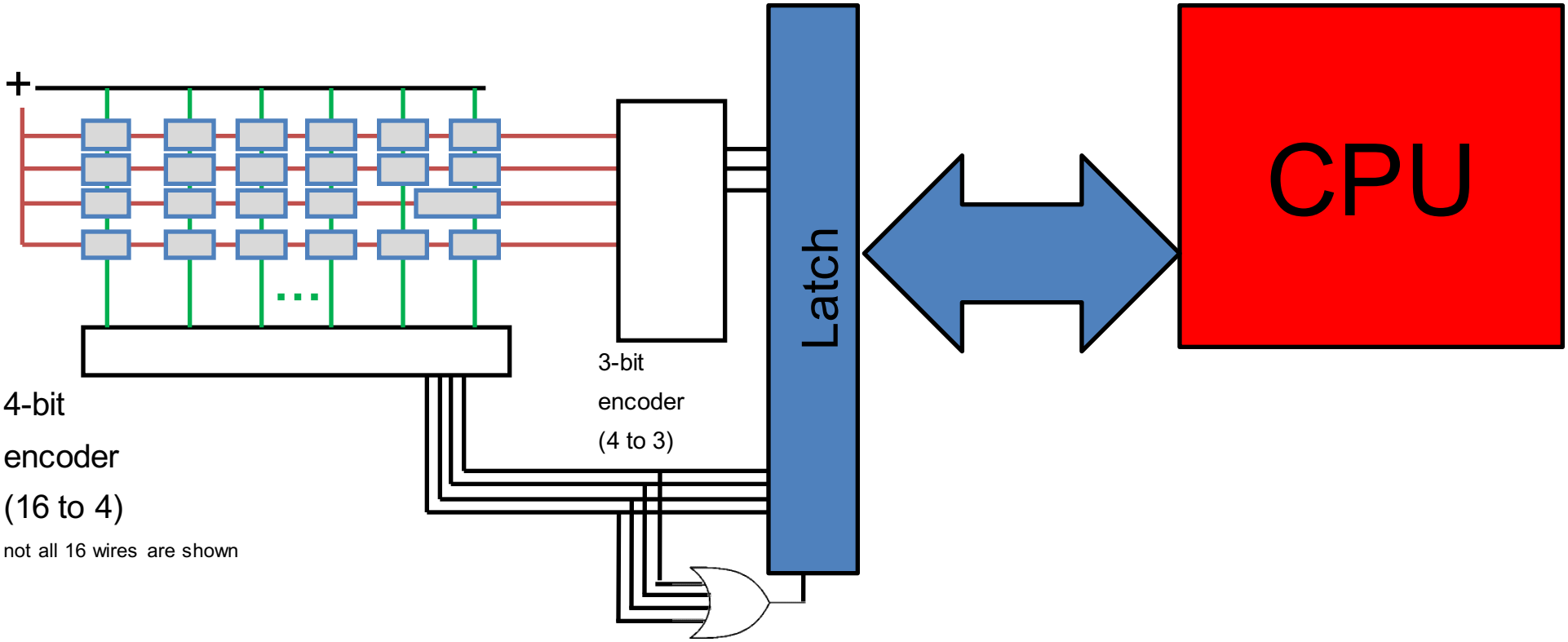

- The keyboard can then appear to the CPU as a special memory address

Device Interfacing Techniques

- Programmed I/O
  - CPU has dedicated, special instructions
  - CPU has additional input/output wires (I/O bus)
  - Instruction specifies device and operation

- Memory-mapped I/O
  - Device communication goes over memory bus
  - Reads/Writes to special addresses converted into I/O operations by dedicated device hardware
  - Each device appears as if it is part of the memory address space
  - **Predominant device interfacing technique**

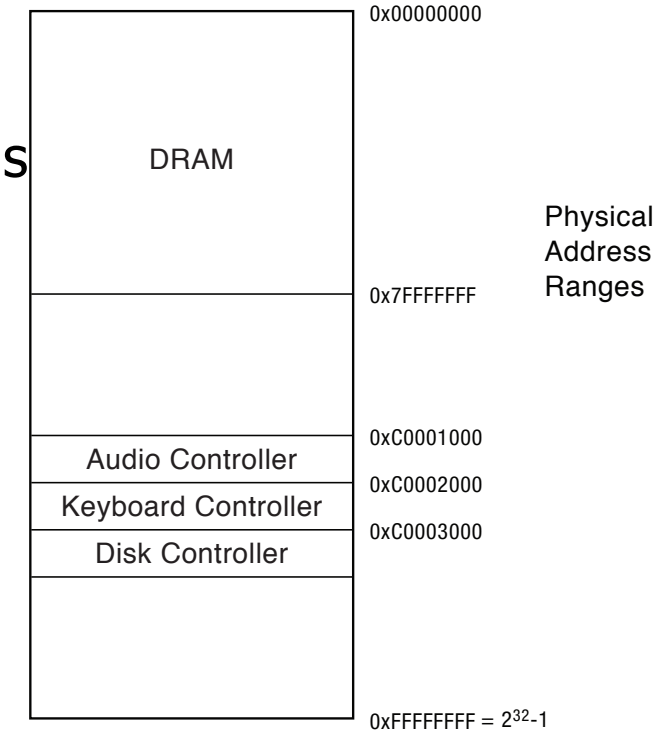

Polling vs. Interrupts

- In our design, CPU constantly reads the keyboard latch memory location to see if a key is pressed
  = Polling
  - Inefficient

- Alternative: add extra circuitry so keyboard can alert CPU when there is a keypress
  = interrupt driven I/O
  → CPU and devices can perform tasks concurrently, increasing throughput
    - Only need a bit of circuitry + a few extra wires to implement "alert" operation

Interrupt Driven I/O

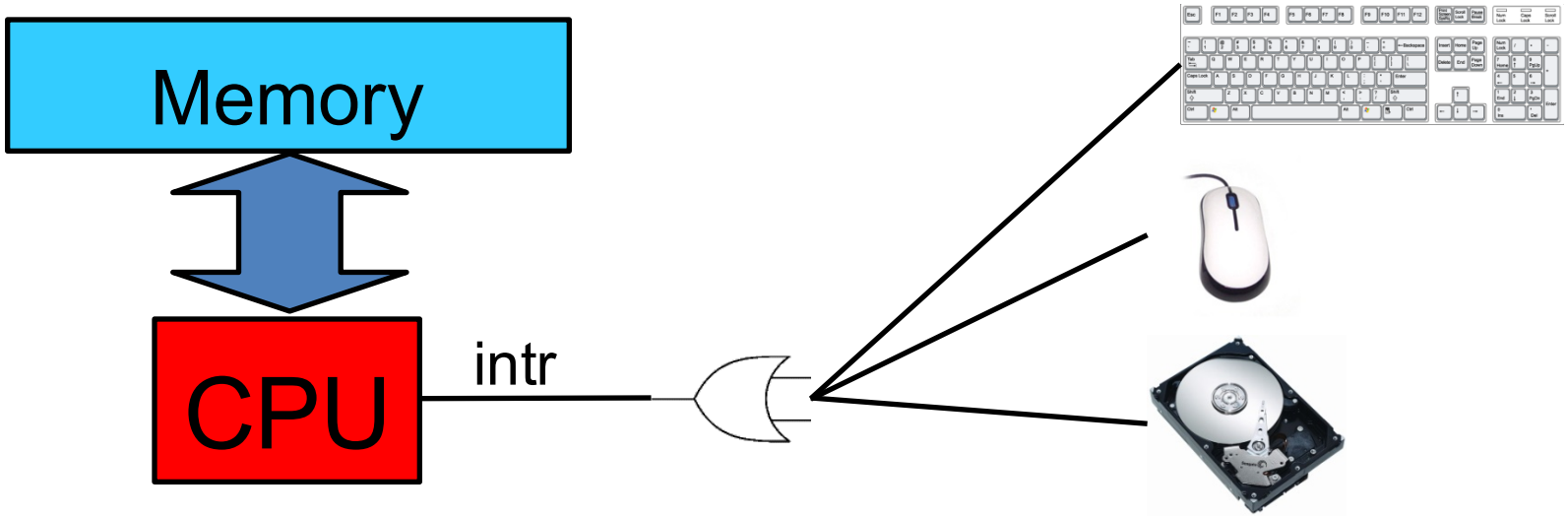

- Interrupt controller mediates between competing devices
  - Raises interrupt flag to get CPU's attention
  - Identifies interrupting device
- Can disable (aka mask) interrupts if CPU desires

Interrupt Driven I/O

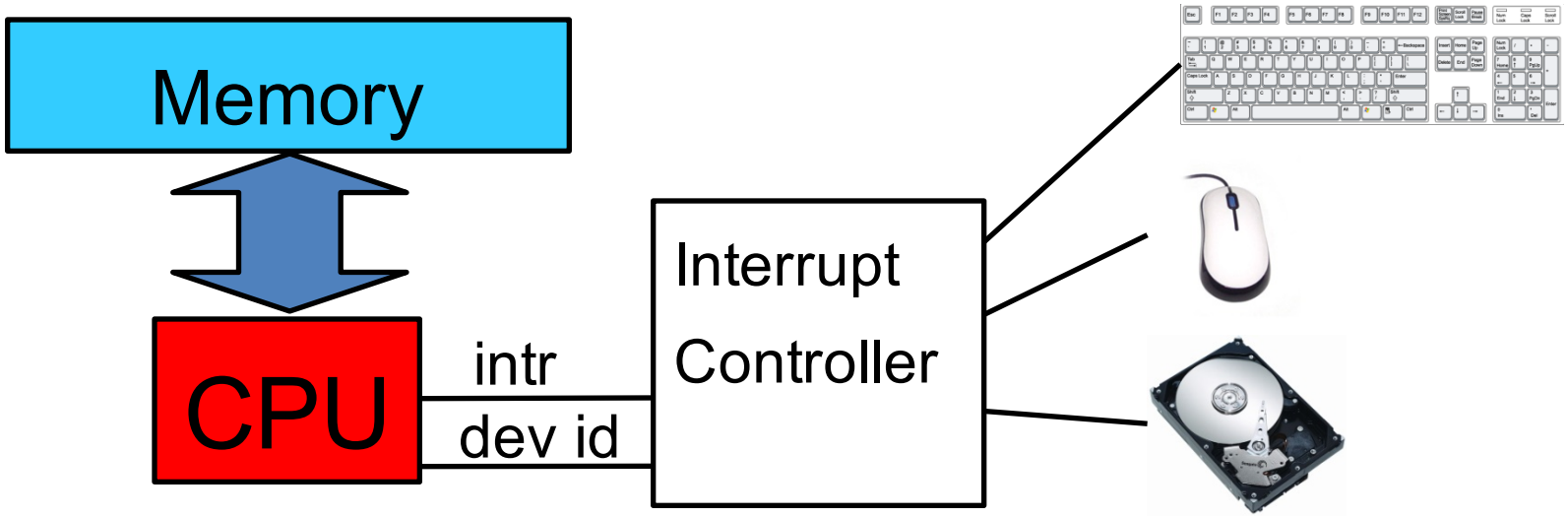

- Interrupt controller mediates between competing devices
  - Raises interrupt flag to get CPU's attention
  - Identifies interrupting device
- Can disable (aka mask) interrupts if CPU desires

Interrupt Management

- Interrupt controllers manage interrupts
  - Maskable interrupts: can be turned off by the CPU for critical processing
  - Nonmaskable interrupts: signifies serious errors (e.g. unrecoverable memory error, power out warning, etc)
- Interrupts contain a descriptor of the interrupting device
  - A priority selector circuit examines all interrupting devices, reports highest level to the CPU
- Interrupt controller implements interrupt priorities
  - Can optionally remap priority levels

Interrupt-driven I/O summary

- Normal interrupt-driven operation with memory-mapped I/O proceeds as follows
  - CPU initiates a device operation (e.g. read from disk) by writing an operation descriptor to a device register
  - CPU continues its regular computation
  - The device asynchronously performs the operation
  - When the operation is complete, interrupts the CPU

- This would incur high-overhead for moving bulk-data
  - One interrupt per byte!

Direct Memory Access (DMA)

- Transfer data directly between device and memory
  - No CPU intervention required for moving bits
- Device raises interrupts solely when the block transfer is complete
- Critical for high-performance devices

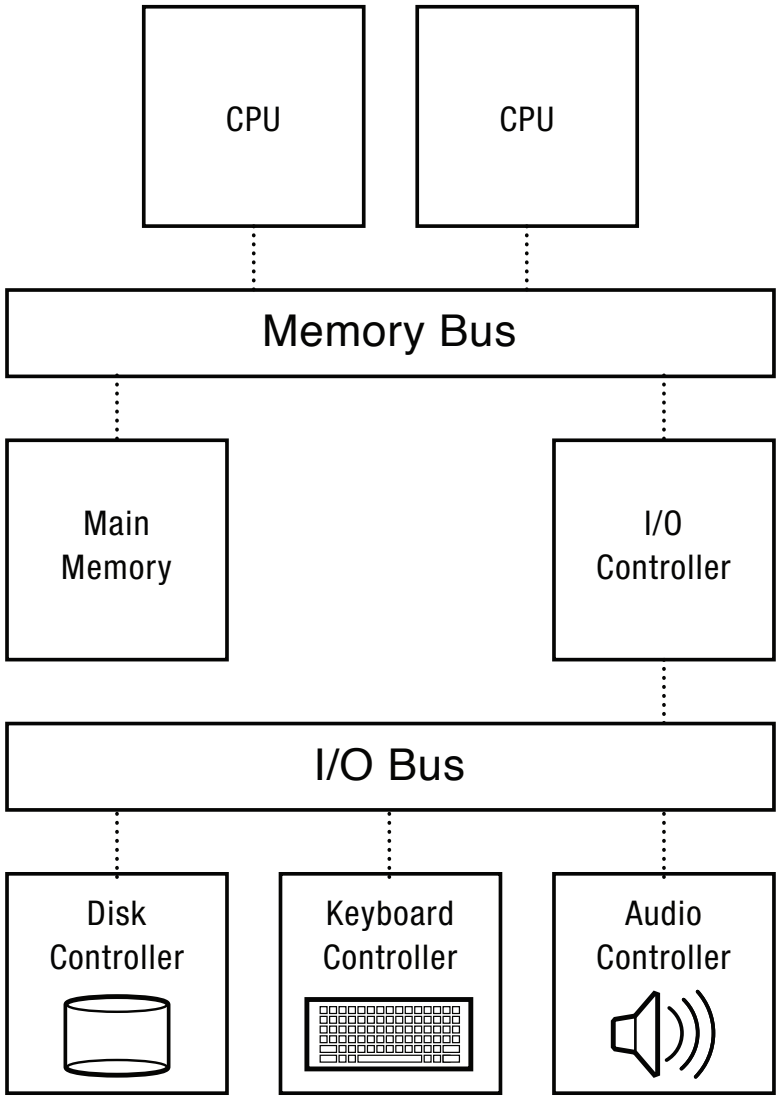

Exceptions

= any time control transfers to the OS

Hardware interrupts

Asynchronous

= caused by events external to CPU

Software exceptions

Synchronous

= caused by CPU executing an instruction

Maskable

Can be turned off by CPU

Ex: alert from the network device that a packet just arrived, clock notifying CPU of clock tick

Unmaskable

Cannot be ignored

Serious errors like alert from the power supply that electricity is about to go out

Software Exceptions

Trap

Intentional

Examples:

*System call (*obtains service from the OS*)*

Breakpoint traps

Privileged instructions

Fault

Unintentional but

Possibly recoverable

Examples:

Division by zero

Page fault

Abort

Unintentional

Not recoverable

Examples:

Parity error

System Calls

- A system call is a controlled transfer of execution from unprivileged code to the OS
  - A potential alternative is to make OS code read-only, and allow applications to just jump to the desired system call routine. Why is this a bad idea?

- A SYSCALL instruction transfers control to a system call handler at a fixed address

Sample System Calls

- Print character to screen
  - Needs to multiplex the shared screen resource between multiple applications
- Send a packet on the network
  - Needs to manipulate the internals of a device whose hardware interface is unsafe
- Allocate a page
  - Needs to update page tables & MMU

Libraries and Wrappers

- Compilers do not emit SYSCALL instructions
  - They do not know the interface exposed by the OS
- Instead, applications are compiled with standard libraries, which provide "syscall wrappers"
  - printf() -> write(); malloc() -> sbrk(); recv(); open(); close(); …
- Wrappers are:
  - written in assembler
  - internally issue a SYSCALL instruction
  - pass arguments to kernel
  - pass result back to calling application

Typical Process Layout

Libraries provide the glue between user processes and the OS

- **`libc`** linked in with all C programs
- Provides **`printf`**, **`malloc`**, … and other routines necessary for programs

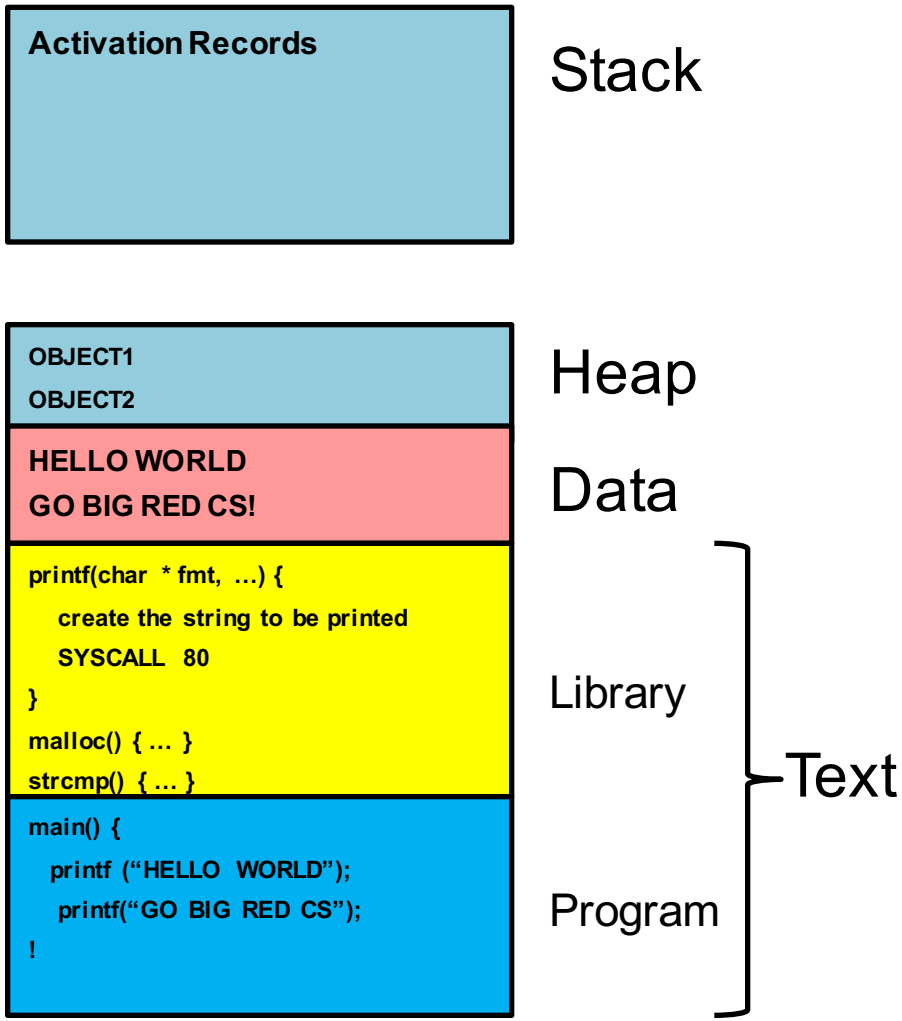

Full System Layout

OS:

- is omnipresent
- steps in to aid application execution
- typically resides in high memory

When an application needs to perform a privileged operation → needs to invoke the OS

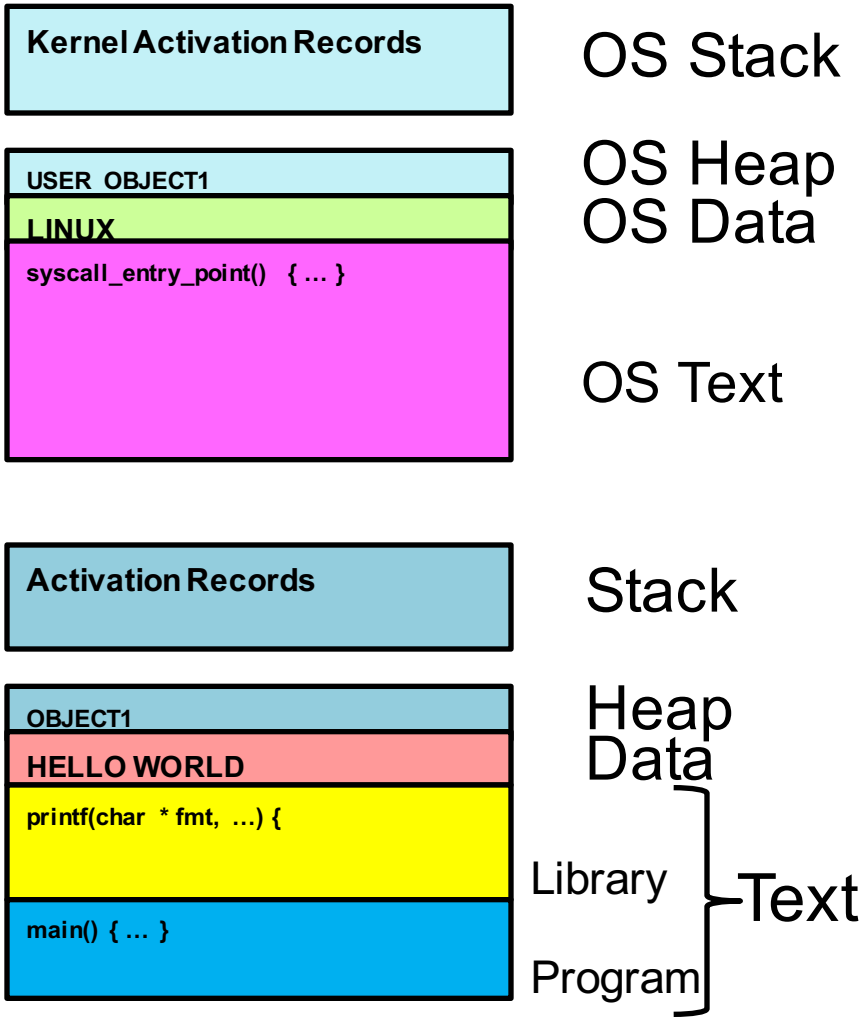

Privilege Levels

- Some processor functionality cannot be made accessible to untrusted user applications
  - e.g. HALT, change MMU settings, set clock, reset devices, manipulate device settings, …
- Need to have a designated mediator between untrusted/untrusting applications
  - The operating system (OS)
- Need to delineate between untrusted applications and OS code
  - Use a "privilege mode" bit in the processor
  - 0 = Untrusted = user, 1 = Trusted = OS

Privilege Mode

- Privilege mode bit indicates if the current program can perform privileged operations
  - On system startup, privilege mode is set to 1, and the processor jumps to a well-known address
  - The operating system (OS) boot code resides at this address
  - The OS sets up the devices, initializes the MMU, loads applications, and resets the privilege bit before invoking the application
- Applications must transfer control back to OS for privileged operations

SYSCALL instruction

- SYSCALL insn does atomic jump to a controlled location
  - Sets the new privilege mode to "kernel mode"
  - Switches the sp to the kernel stack
  - Saves the old (user) SP value
  - Saves the old (user) PC value (= return address)
  - Saves the old privilege mode (why?)
  - Sets the new PC to the kernel syscall handler
- Kernel system call handler carries out desired system call
  - Saves callee-save registers
  - Examines the syscall number
  - Checks arguments for sanity
  - Performs operation
  - Stores result in result register
  - Restores callee-save registers
  - Clears scratch registers
- "Return from SYSCALL" instruction
  - restores the privilege mode, SP, and PC

Interrupts & Exceptions

- On an interrupt or exception
  - Sets the new privilege mode to 1
  - Switches the sp to the kernel stack
  - Saves the old (user) SP value
  - Saves the old (user) PC value
  - Saves the old privilege mode
  - Saves cause of the interrupt/exception
  - Sets the new PC to the kernel interrupt/exception handler
- Kernel interrupt/exception handler handles the event
  - Saves all registers
  - Examines the cause
  - Performs operation required
  - Restores all registers
- Performs a "Return from Interrupt" instruction
  - restores the privilege mode, SP and PC

Syscall vs. other exceptions

- Differences:
  - how they are initiated
  - how much state needs to be saved and restored
- Syscall requires less state saving
  - Caller-save registers already saved by the application
  - Does this mean less state restoring?
- Other exceptions typically require saving and restoring the full state of the processor
  - because application got struck by lightning without anticipating the control transfer