Introduction

Prof. Hakim Weatherspoon
CS 3410
Computer Science
Cornell University

[Weatherspoon, Bala, Bracy, and Sirer]

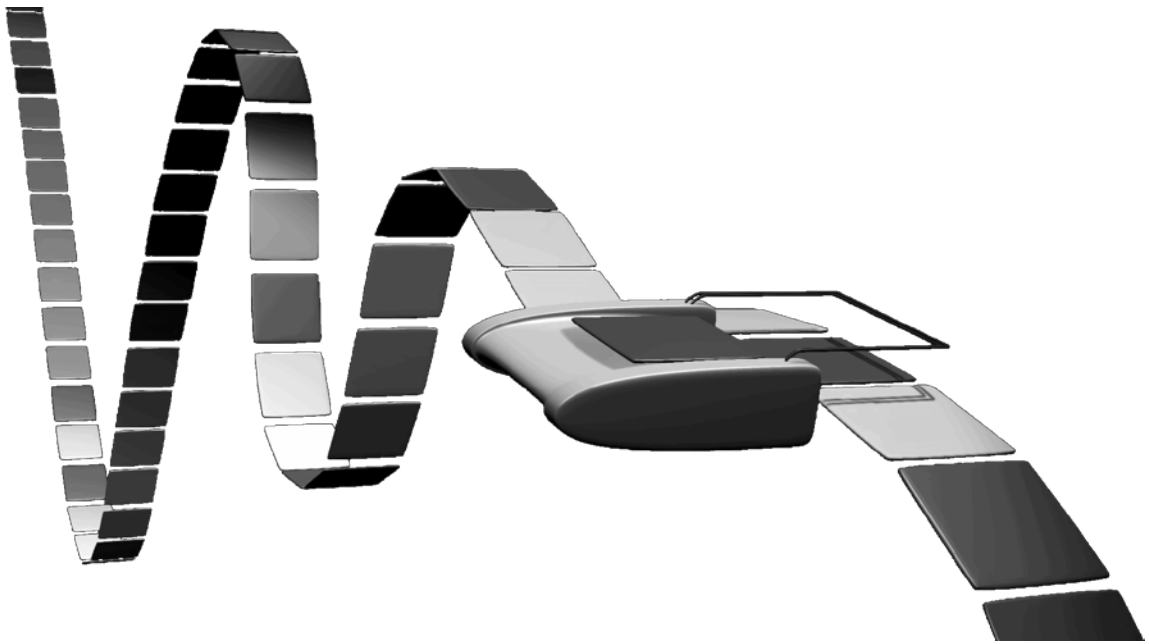

Turing Machine
1936

Alan Turing

= abstract model for CPU that can simulate any algorithm

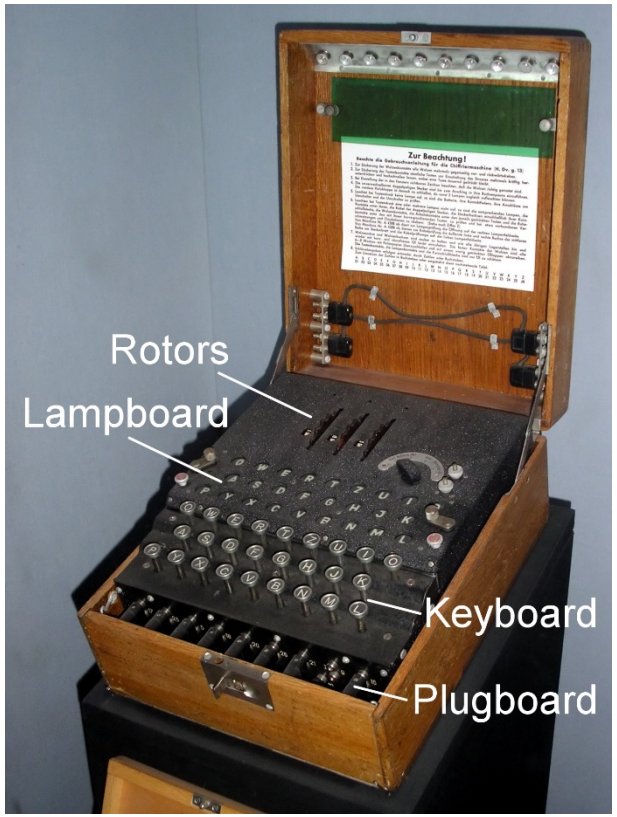

Enigma machine

Used by the Germans during World War II to encrypt and exchange secret messages

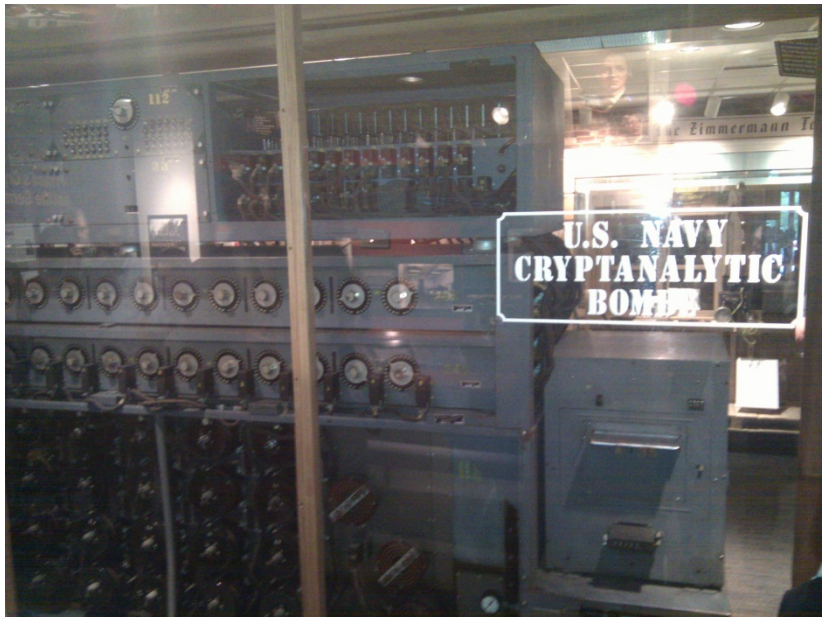

The Bombe

used by the Allies to break the German Enigma machine during World War II

ENIAC
Electronic Numerical Integrator And Computer

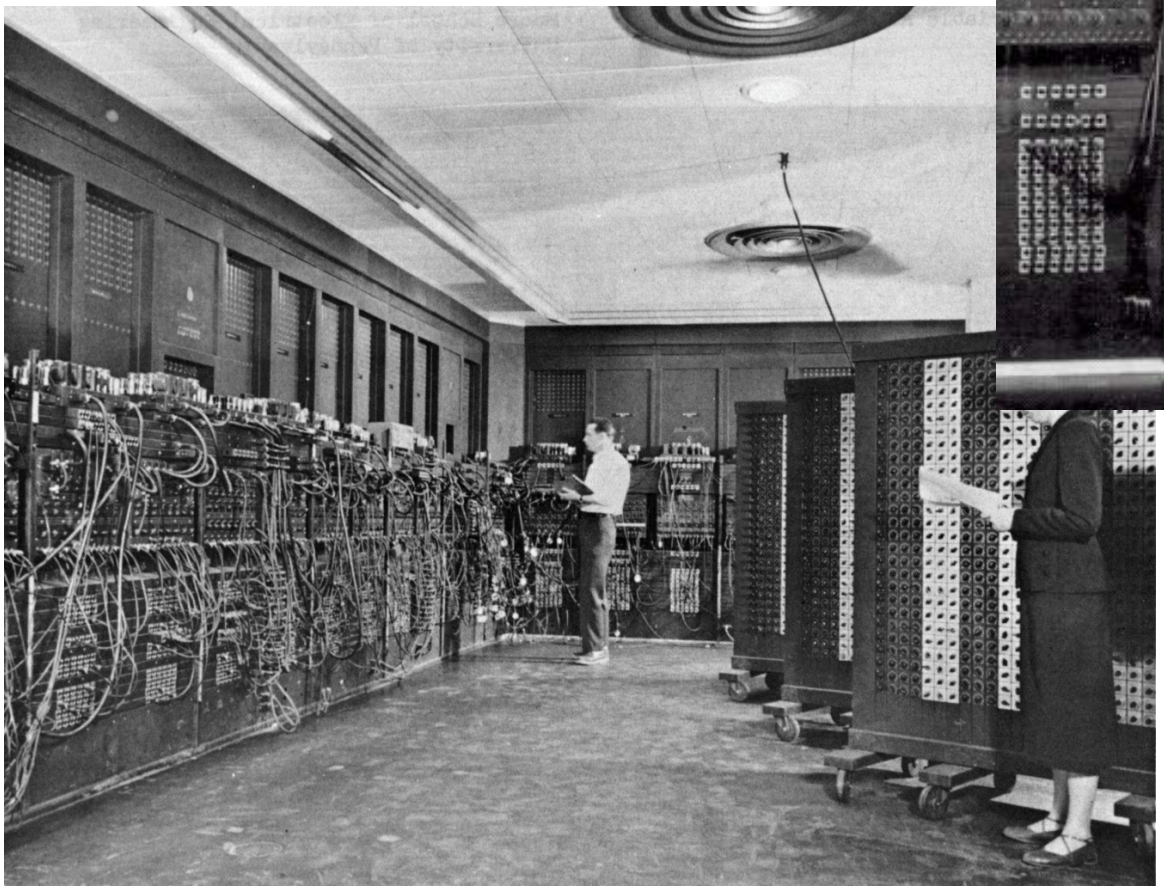

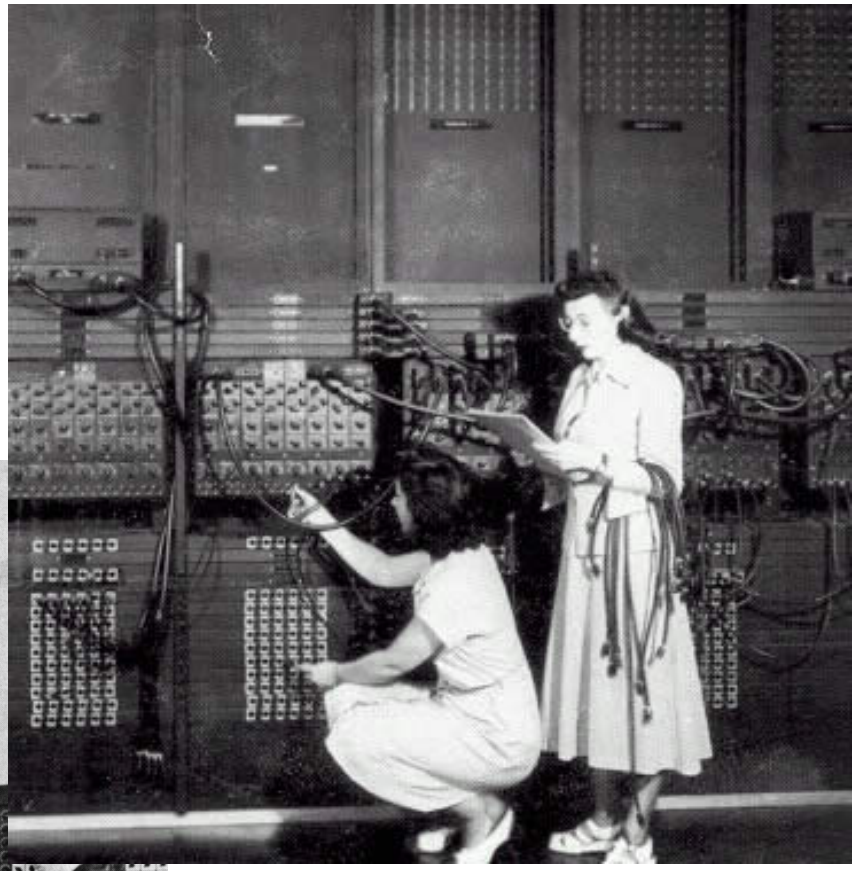

1946
John Mauchly
J. Presper Eckert

IBM 7090

Human Computers programming the IBM 7090

Mary Jackson

Hidden Figures

Who are you?

"Sometimes it is the people that no one imagines anything of who do the things that no one can imagine." – Alan Turing

- Turing Award Winners?
- Eckert Mauchly Award Winners?

Course Objective

- Understand the HW / SW interface software
  - How a processor works
  - How a computer is organized

- Establish a foundation for building applications
  - How to write a good program
    - Good = correct, fast, and secure
  - How to understand where the world is going
- Understand technology (past, present, future)

What is this?

```
#include <stdio.h>

int main() {
  printf("Hello world!\n");
  return 0;
}
```

How does it work?
I'm glad you asked…
15 weeks later and you'll know!
"I know Kung Fu."

Compilers and Assemblers

C

```
int x = 10;
x = 2 * x + 15;
```

compiler

r0 = 0

RISC-V assembly language

```
addi r5, r0, 10
muli r5, r5, 2
addi r5, r5, 15
```

r5 = r0 + 10

r5 = r5 * 2

r5 = r5 + 15

Everything is a number!

assembler

RISC-V machine language

10	r0	r5	op = addi
000000001010	00000	000	00101	0010011
00000000000100101001001010010011			
000000001111	00101	000	00101	0010011
15	r5	r5	op = addi

How to Design a Simple Process

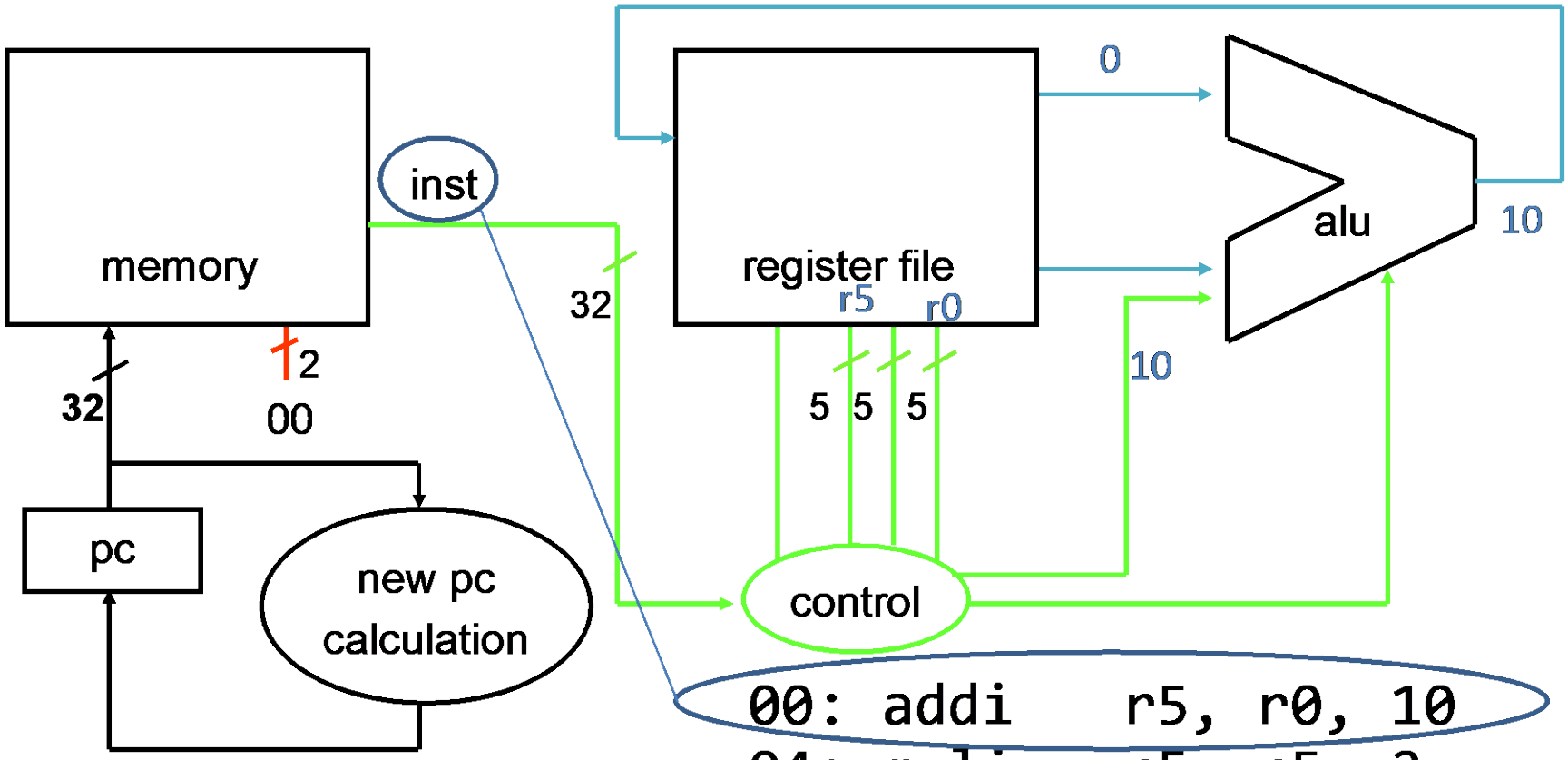


```
00: addi    r5, r0, 10
04: muli    r5, r5, 2
08: addi    r5, r5, 15
```

Instruction Set Architecture (ISA)

- Abstract interface between hardware and the lowest level software
- User portion of the instruction set plus the operating system interfaces used by application programmers

Basic Computer System

- A processor executes instructions
  - Processor has some internal state in storage elements (registers)
- A memory holds instructions and data
  - von Neumann architecture: combined inst and data
- A bus connects the two

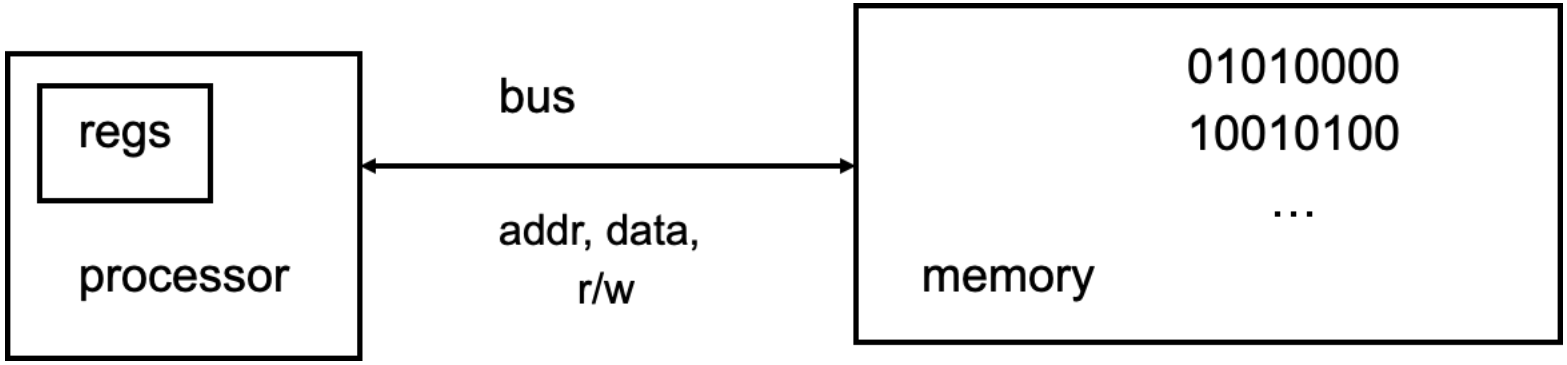

Overview

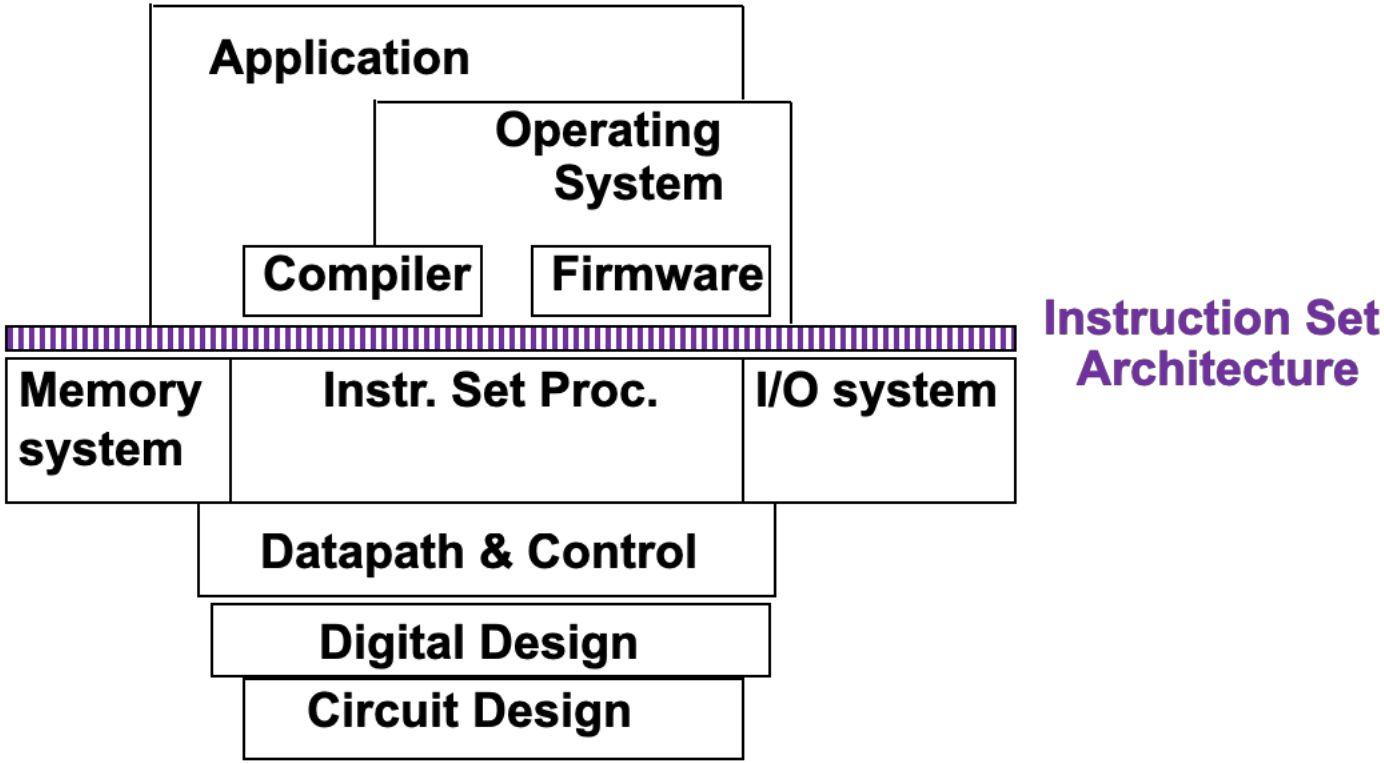
Application
Operating System
Compiler
Firmware
Instruction Set Architecture
Memory system
Instr. Set Proc.
I/O system
Datapath & Control
Digital Design
Circuit Design

Covered in this course

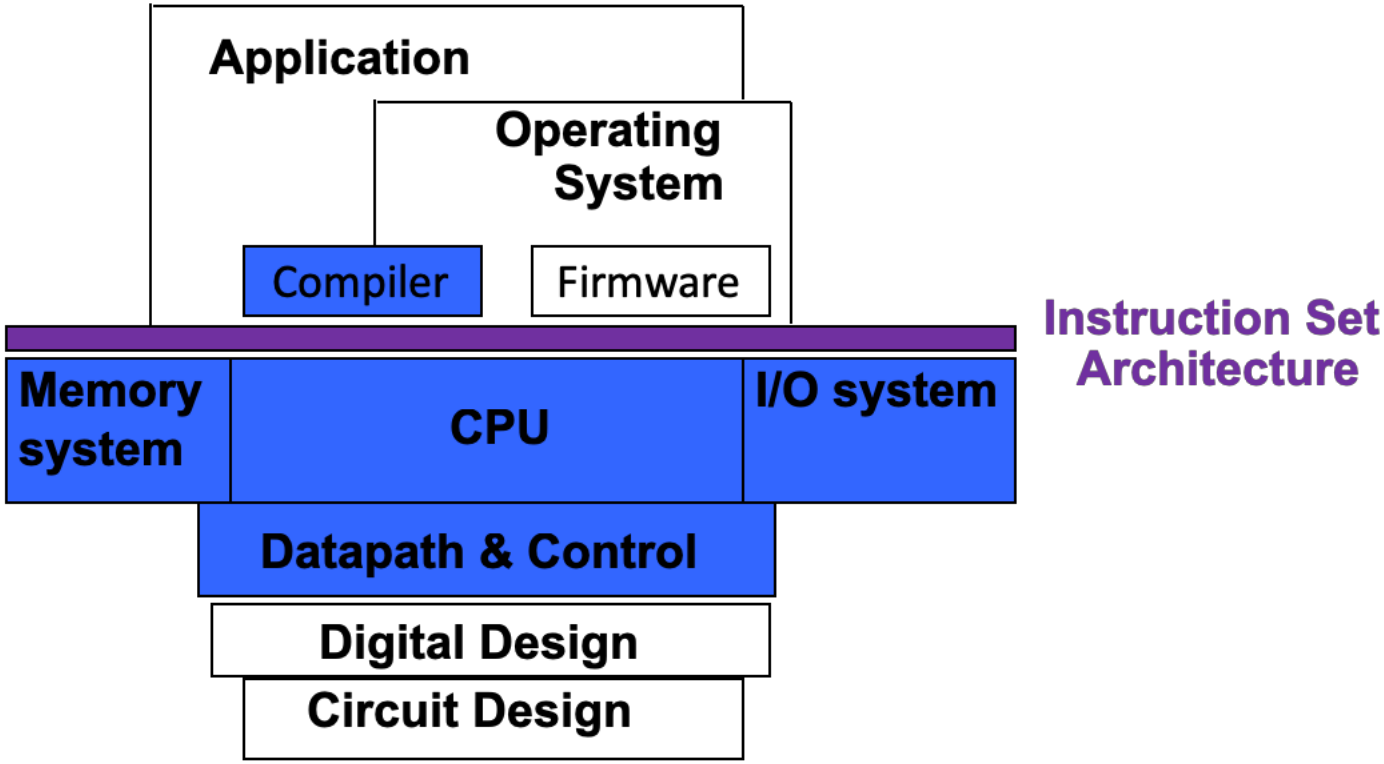

Where did it begin?

- Electrical Switch
  - On/Off
  - Binary
- Transistor

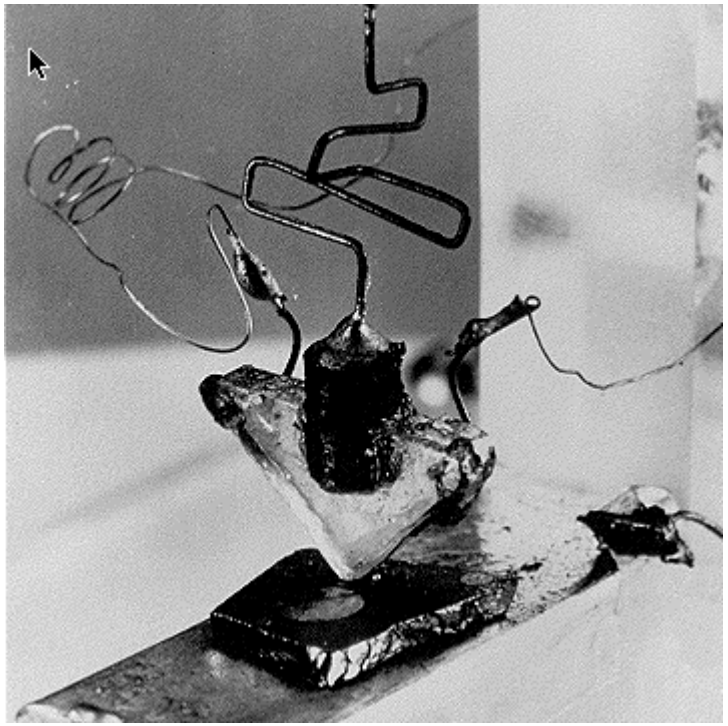

The first transistor on a workbench at AT&T Bell Labs in 1947

Moore's Law

- 1965
  - # of transistors integrated on a die doubles every 18-24 months (*i.e.,* grows exponentially with time)

- Amazingly visionary
  - 2300 transistors, 1 MHz clock (Intel 4004) - 1971
  - 16 Million transistors (Ultra Sparc III)
  - 42 Million transistors, 2 GHz clock (Intel Xeon) – 2001
  - 55 Million transistors, 3 GHz, 130nm technology, 250mm^2 die (Intel Pentium 4) – 2004
  - 290+ Million transistors, 3 GHz (Intel Core 2 Duo) – 2007
  - 721 Million transistors, 2 GHz (Nehalem) - 2009
  - 1.4 Billion transistors, 3.4 GHz Intel Haswell (Quad core) – 2013
  - 7.2 Billion transistors, 3-3.9 GHz Intel Broadwell (22-core) – 2016

Microprocessor Transistor Counts 1971-2011 & Moore's Law

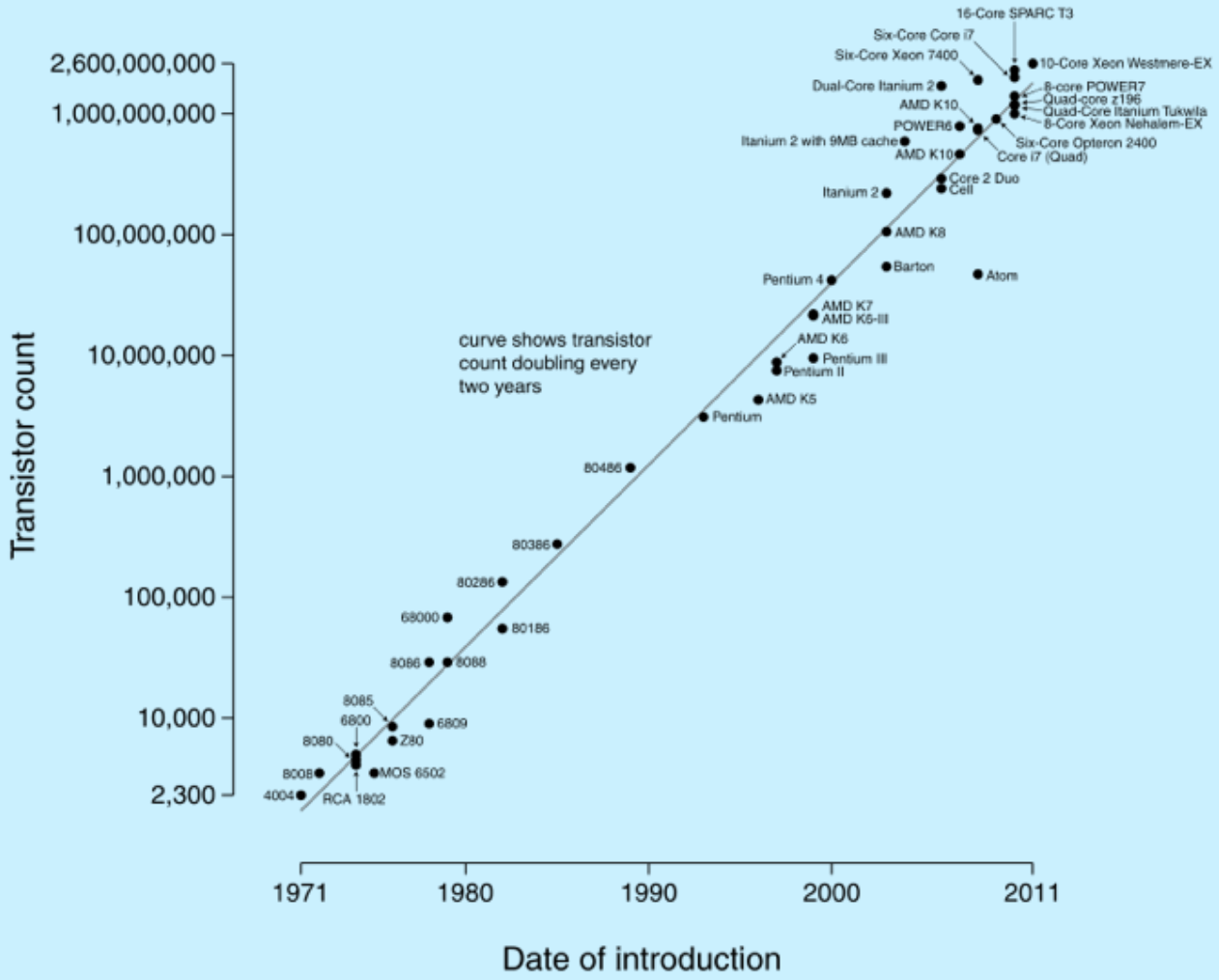

Processor Performance Increase

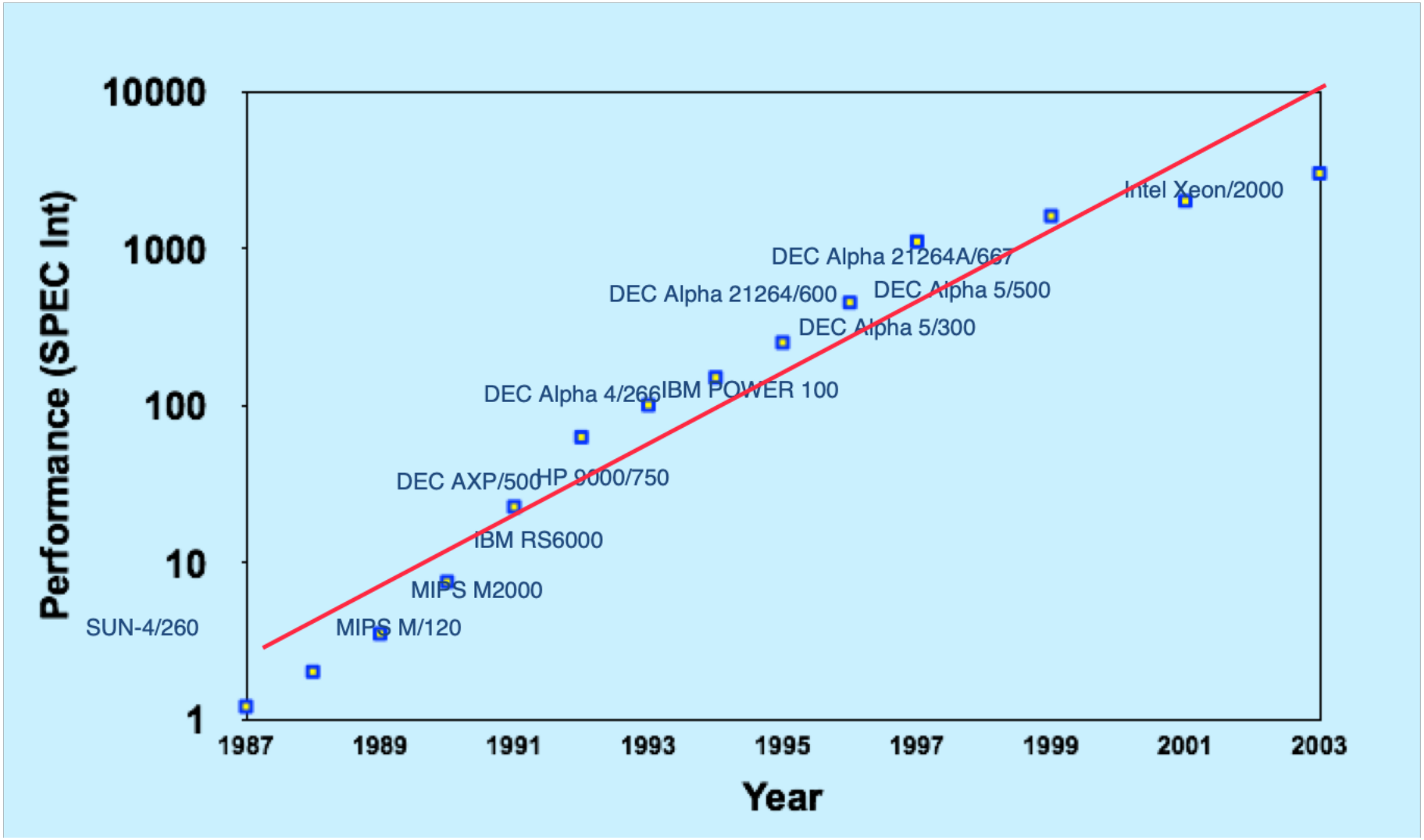

Then and Now

https://en.wikipedia.org/wiki/Transistor_count
http://techguru3d.com/4th-gen-intel-haswell-processors-architecture-and-lineup/

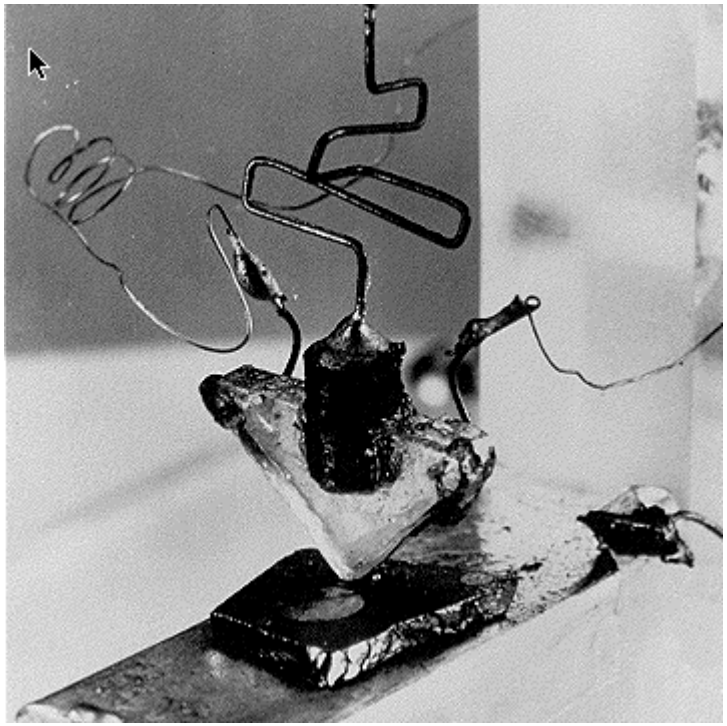

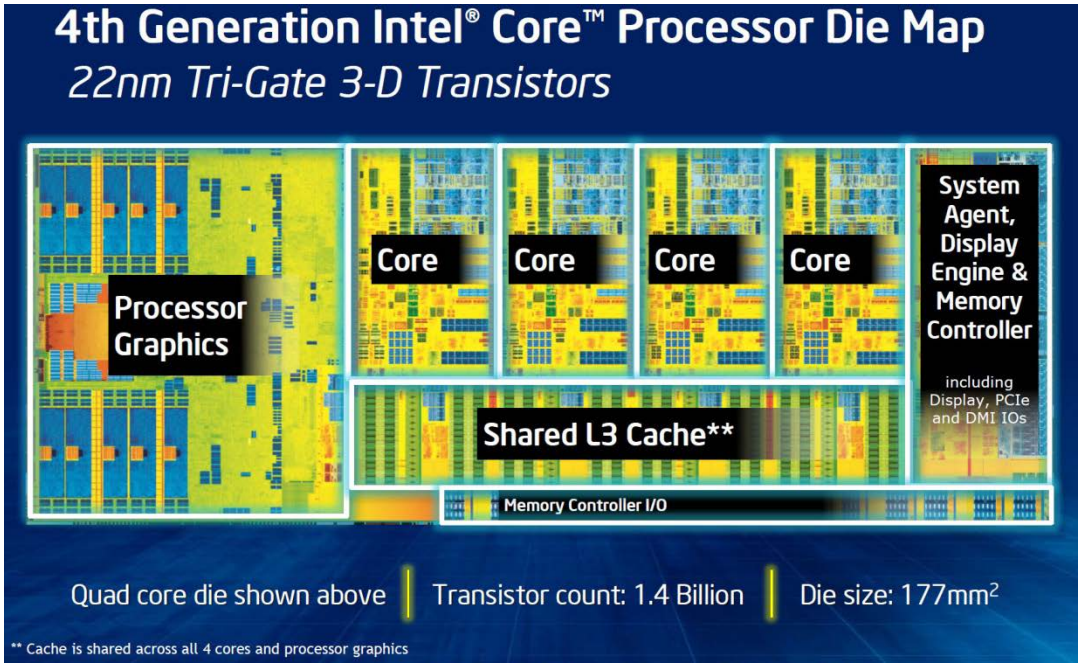

- The first transistor
  - One workbench at AT&T Bell Labs
  - 1947
  - Bardeen, Brattain, and Shockley
- Intel Haswell
  - 1.4 billion transistors, 22nm
  - 177 square millimeters
  - Four processing cores

What are we doing with all these transistors?

https://en.wikipedia.org/wiki/Transistor_count

Then and Now

https://en.wikipedia.org/wiki/Transistor_count
https://www.computershopper.com/computex-2015/performance-preview-desktop-broadwell-at-computex-2015

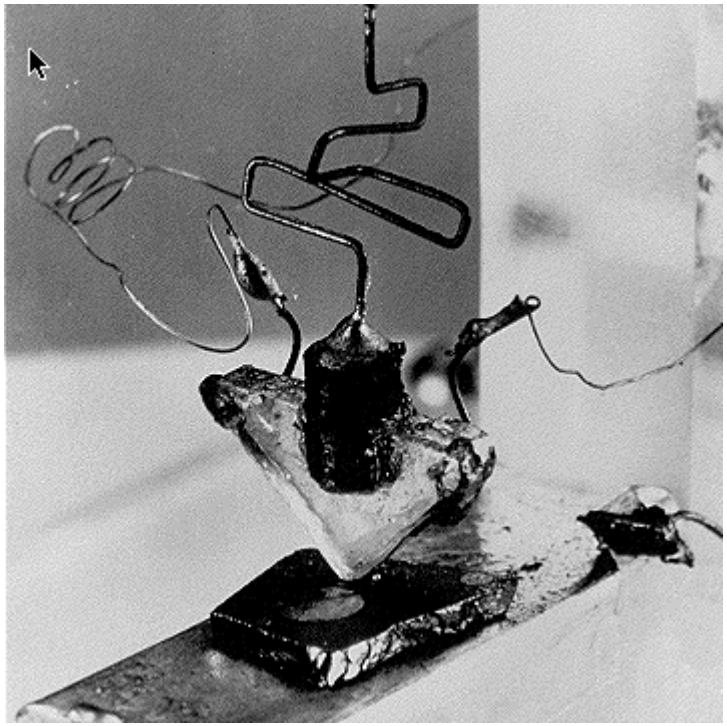

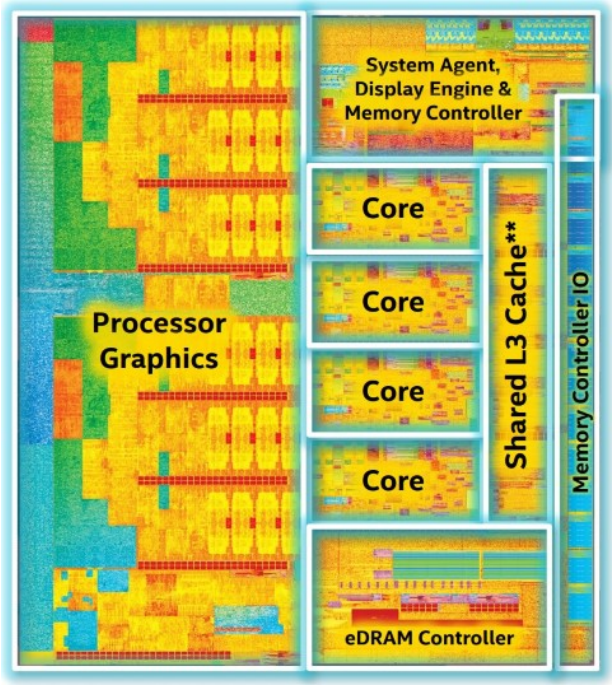

- The first transistor
  - One workbench at AT&T Bell Labs
  - 1947
  - Bardeen, Brattain, and Shockley
- Intel Broadwell
  - 7.2 billion transistors, 14nm
  - 456 square millimeters
  - Up to 22 processing cores

What are we doing with all these transistors?

https://en.wikipedia.org/wiki/Transistor_count

Then and Now

https://en.wikipedia.org/wiki/Transistor_count

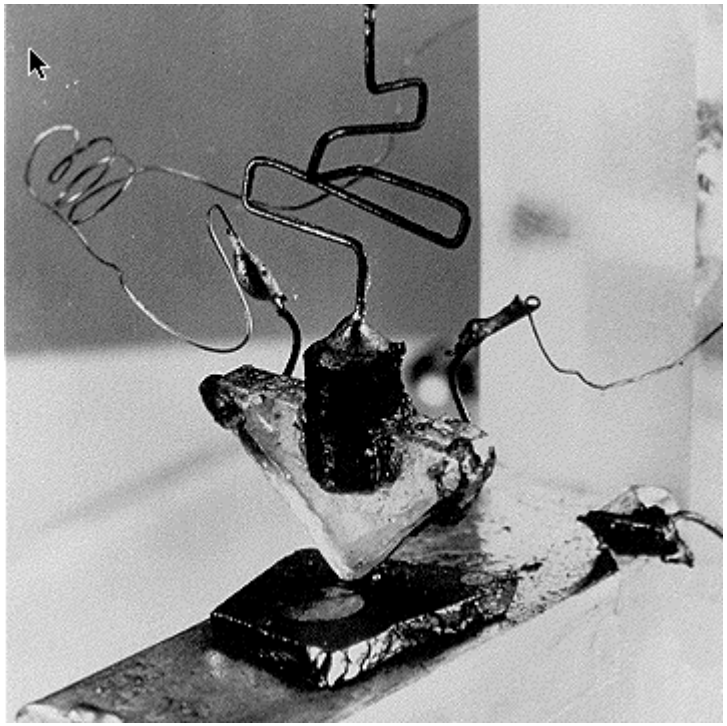

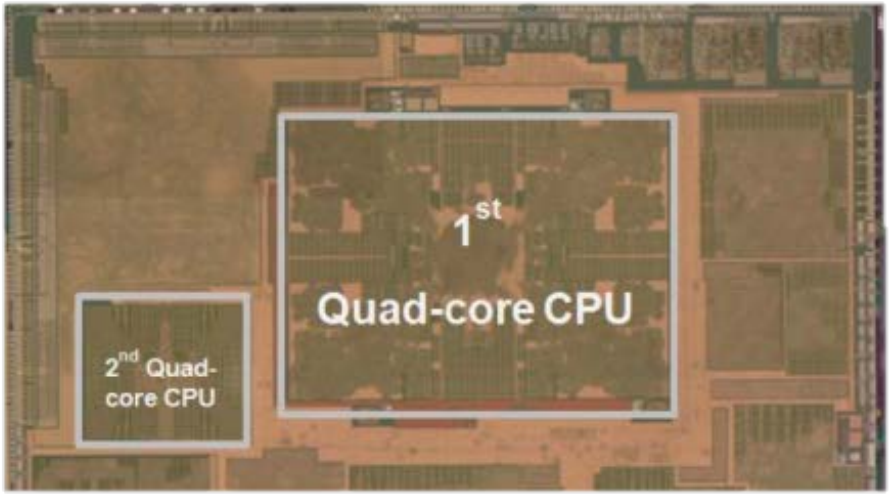

- The first transistor
  - One workbench at AT&T Bell Labs
  - 1947
  - Bardeen, Brattain, and Shockley
- Galaxy Note 9
  - 8 processing cores
  - Exynos 9 Octa 8895 processor

What are we doing with all these transistors?

https://en.wikipedia.org/wiki/Exynos

What are we doing with all these transistors?

- Everything these days!
  - Phones, cars, televisions, games, computers,…

Computer System Organization

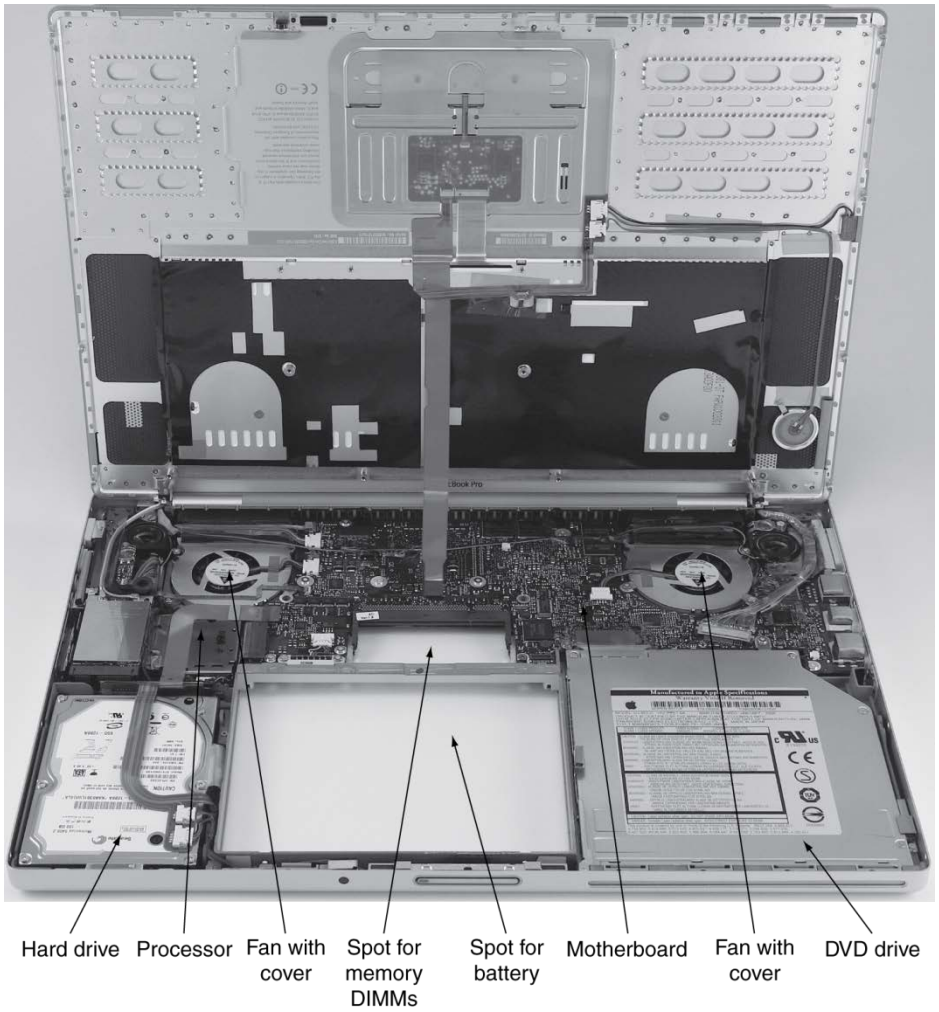

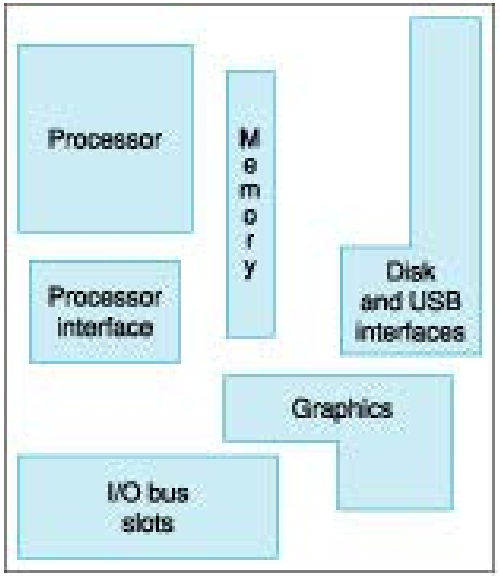

Reflect

Why take this course?

Basic knowledge needed for *all* other areas of CS:

operating systems, compilers, ...

Levels are not independent

hardware design ↔ software design ↔ performance

Crossing boundaries is hard but important

device drivers

Good design techniques

abstraction, layering, pipelining, parallel vs. serial, ...

Understand where the world is going

The Mysteries of Computing will be revealed!