Processor

CS 3410, Spring 2014

Computer Science

Cornell University

See P&H Chapter: 4.1-4.4, 1.4, Appendix A

Full Datapath

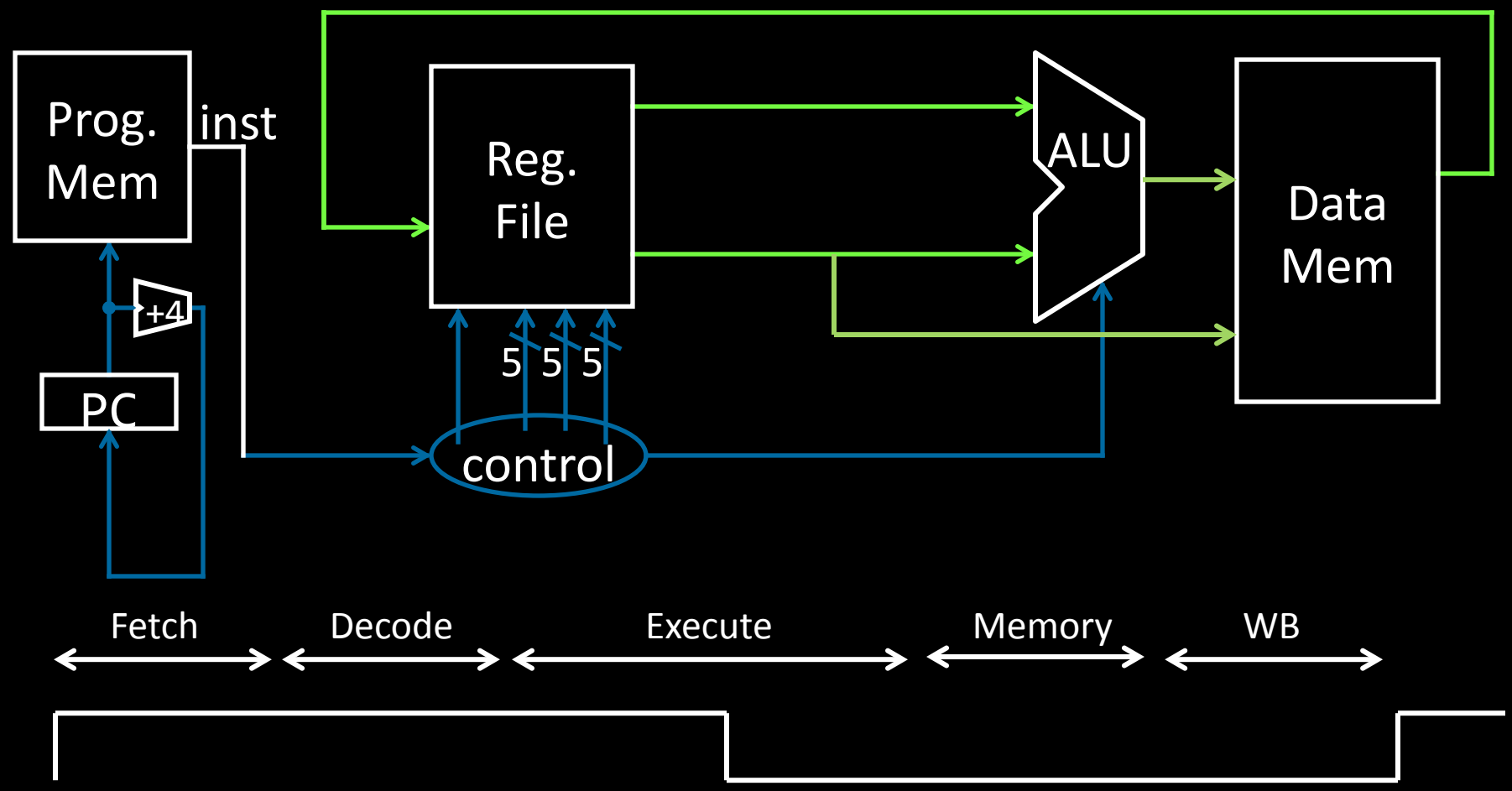

Iclicker

How many stages of a datapath are there in our single cycle MIPS design?

A) 1

B) 2

C) 3

D) 4

E) 5

Stages of datapath (1/5)

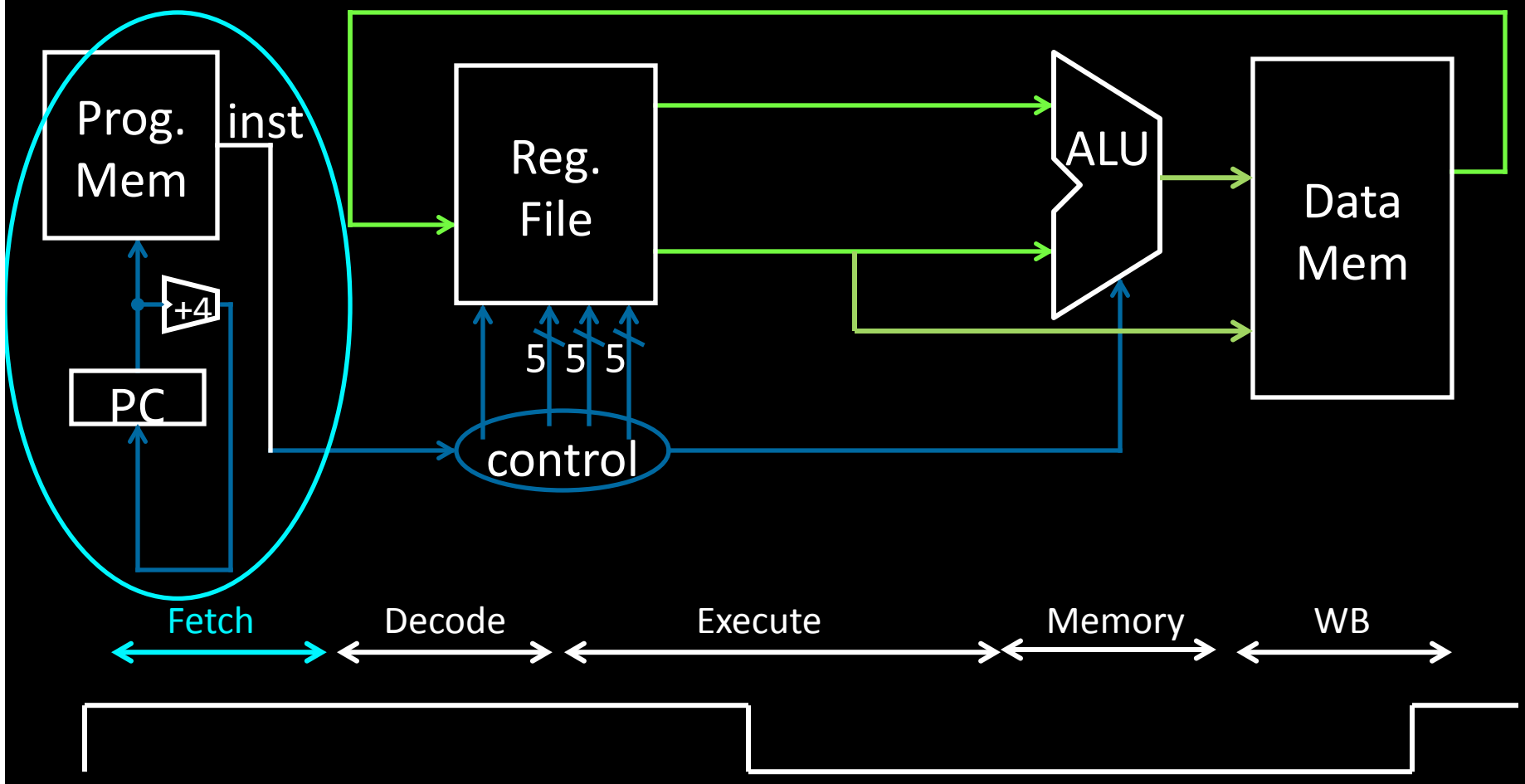

A Single cycle processor

Stages of datapath (2/5)

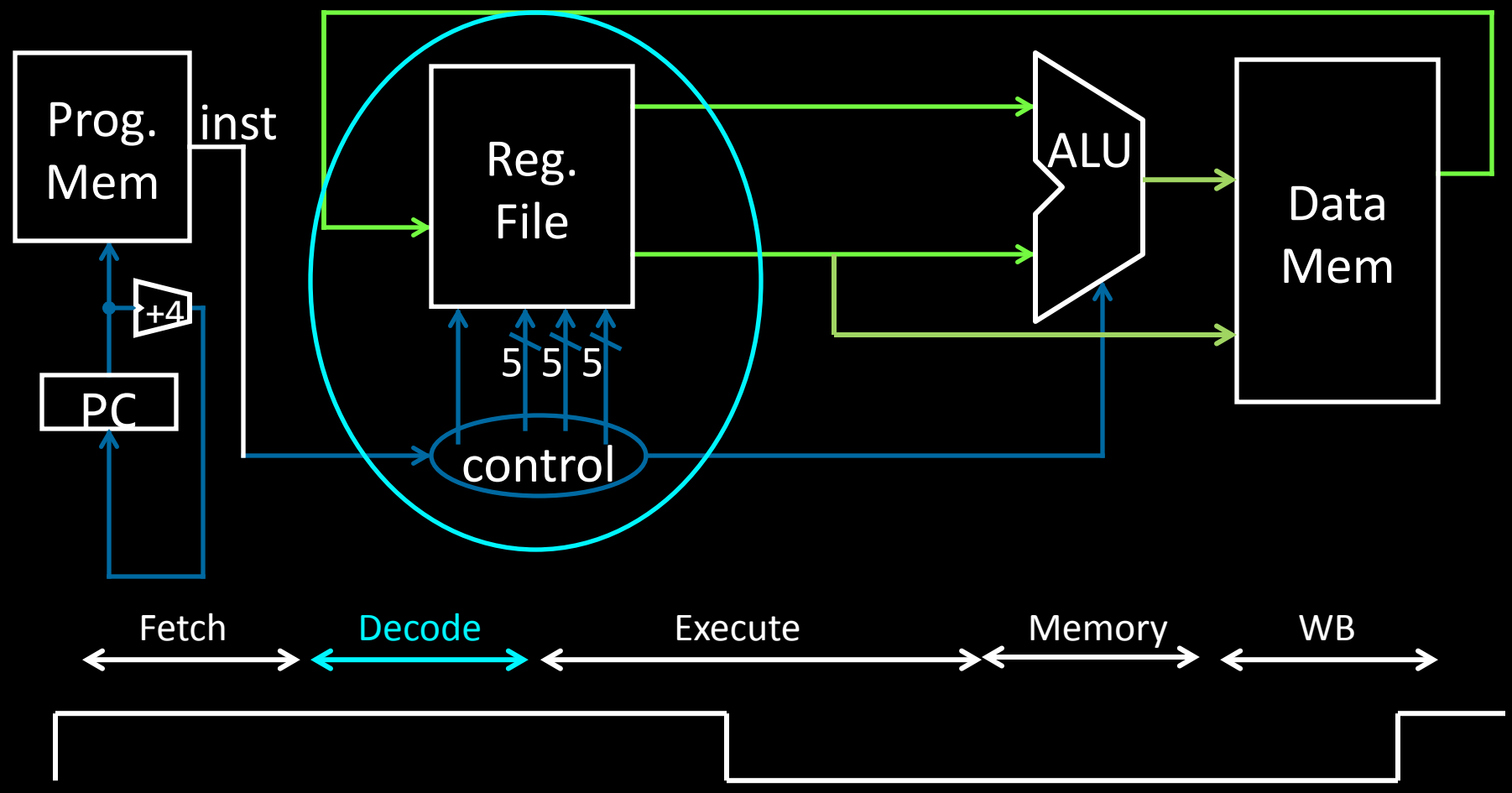

A Single cycle processor

Stages of datapath (3/5)

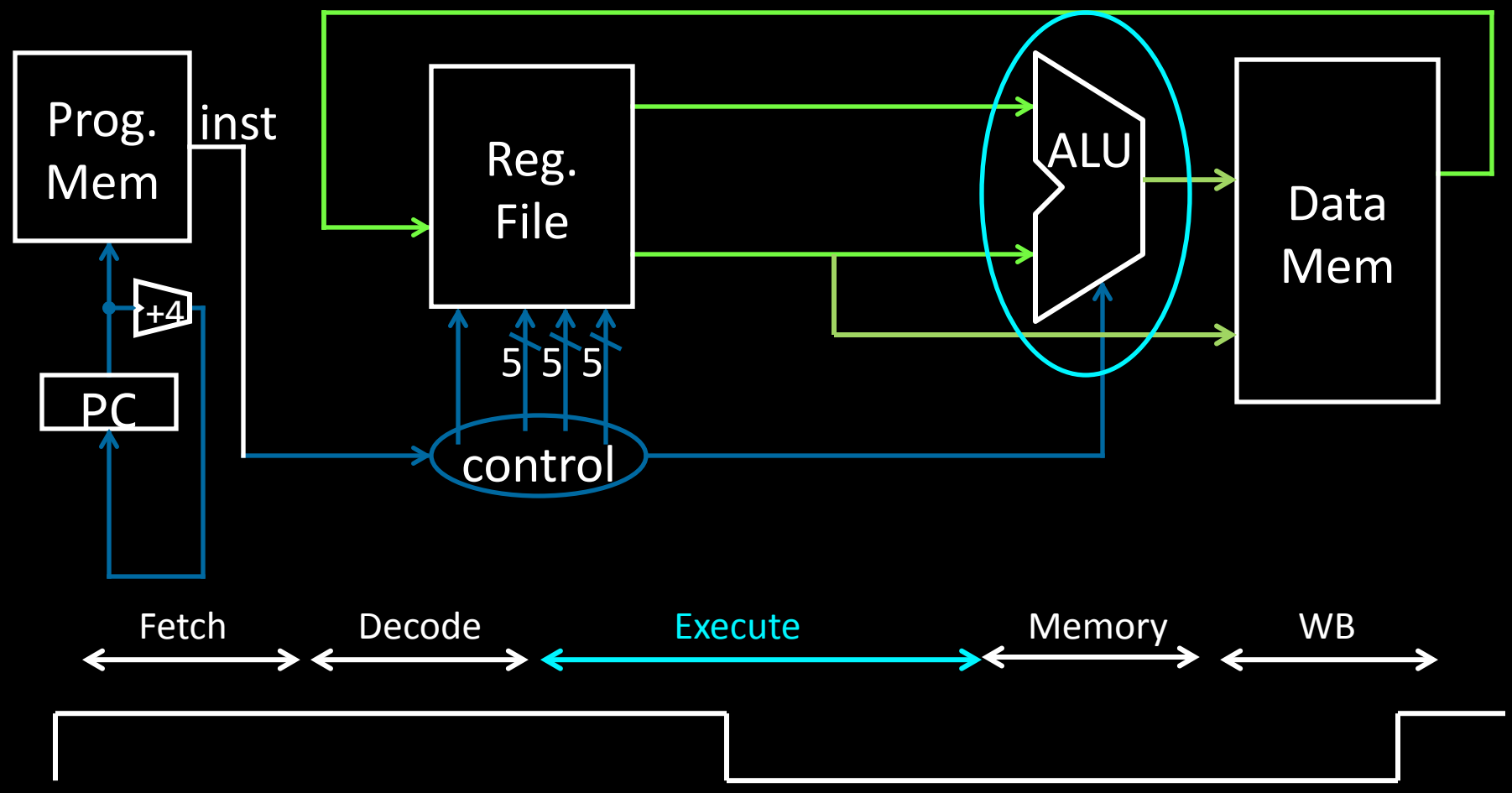

A Single cycle processor

Stages of datapath (4/5)

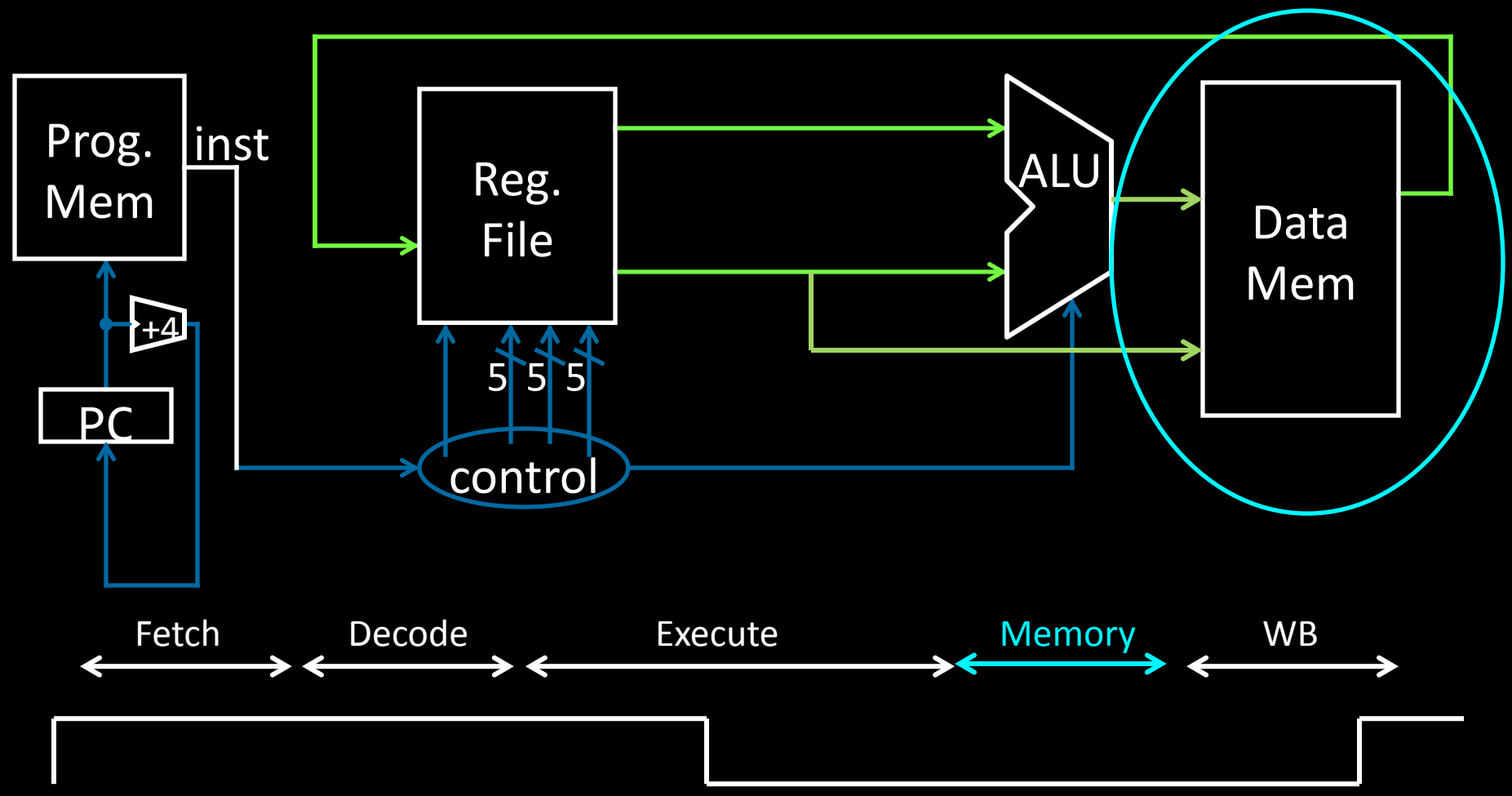

A Single cycle processor

Stages of datapath (5/5)

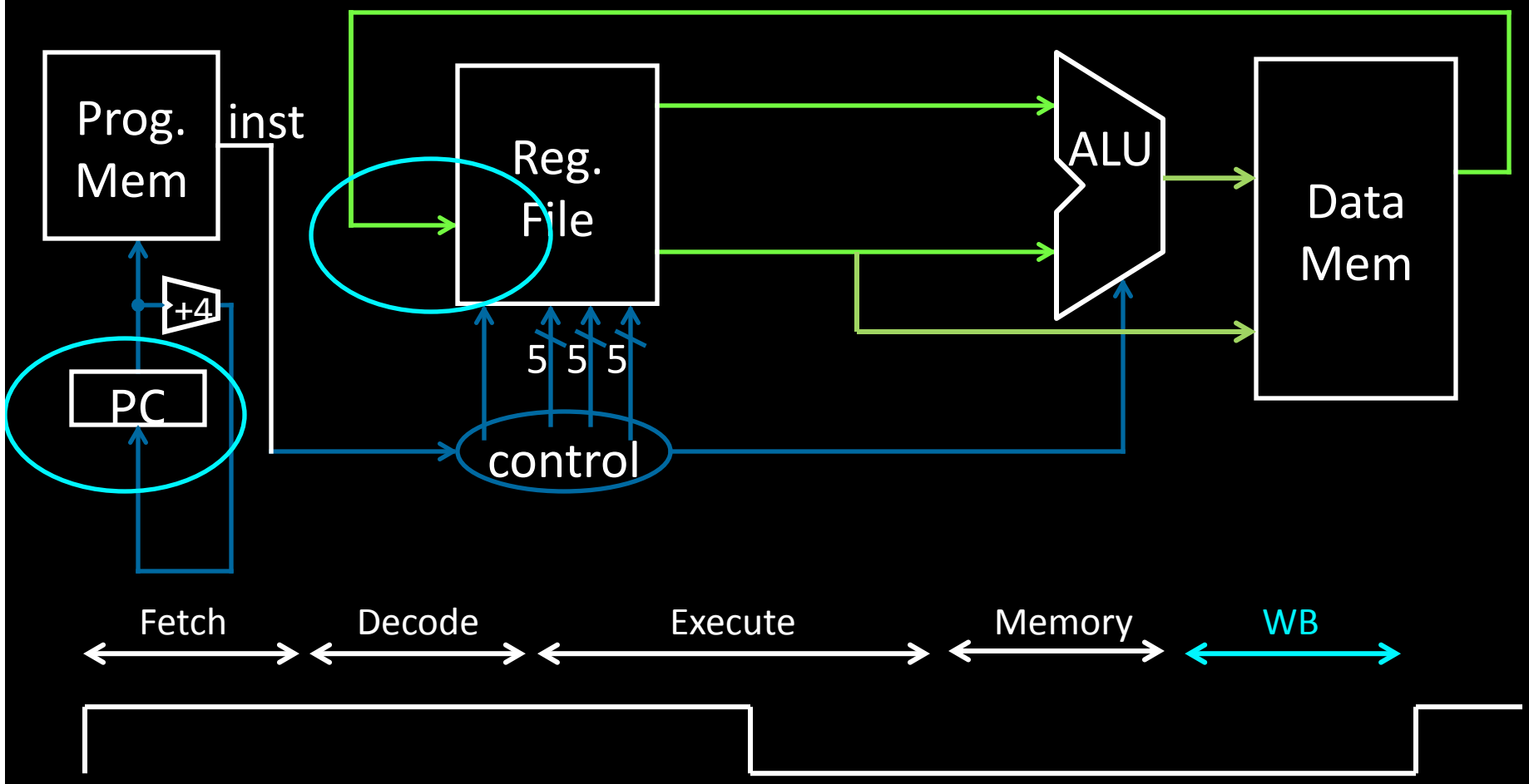

Takeaway

The datapath for a MIPS processor has five stages:

1. Instruction Fetch
2. Instruction Decode
3. Execution (ALU)
4. Memory Access
5. Register Writeback

This five stage datapath is used to execute all MIPS instructions

Iclicker

There are how many types of instructions in the MIPS ISA?

A) 1

B) 3

C) 5

D) 200

E) 1000s

MIPS instructions

All MIPS instructions are 32 bits long, has 3 formats

R-type

op	rs	rt	rd	shamt	func
6 bits	5 bits	5 bits	5 bits	5 bits	6 bits

I-type

op	rs	rt	immediate
6 bits	5 bits	5 bits	16 bits

J-type

op	immediate (target address)
6 bits	26 bits

MIPS Instruction Functions

Arithmetic/Logical

- R-type: result and two source registers, shift amount
- I-type: 16-bit immediate with sign/zero extension

Memory Access

- load/store between registers and memory
- word, half-word and byte operations

Control flow

- conditional branches: pc-relative addresses
- jumps: fixed offsets, register absolute

Arithmetic Instructions: Shift

```
000000 00000 00010 00010 00011 000000
op     -     rt    rd    shamt func
```

6 bits 5 bits 5 bits 5 bits 5 bits 6 bits

R-Type

op	func	mnemonic	description
0x0	0x0	SLL rd, rt, shamt	R[rd] = R[rt] << shamt
0x0	0x2	SRL rd, rt, shamt	R[rd] = R[rt] >>> shamt (zero ext.)
0x0	0x3	SRA rd, rt, shamt	R[rd] = R[rt] >> shamt (sign ext.)

ex: r8 = r4 * 64 # SLL r8, r4, 6

r8 = r4 << 6

Shift

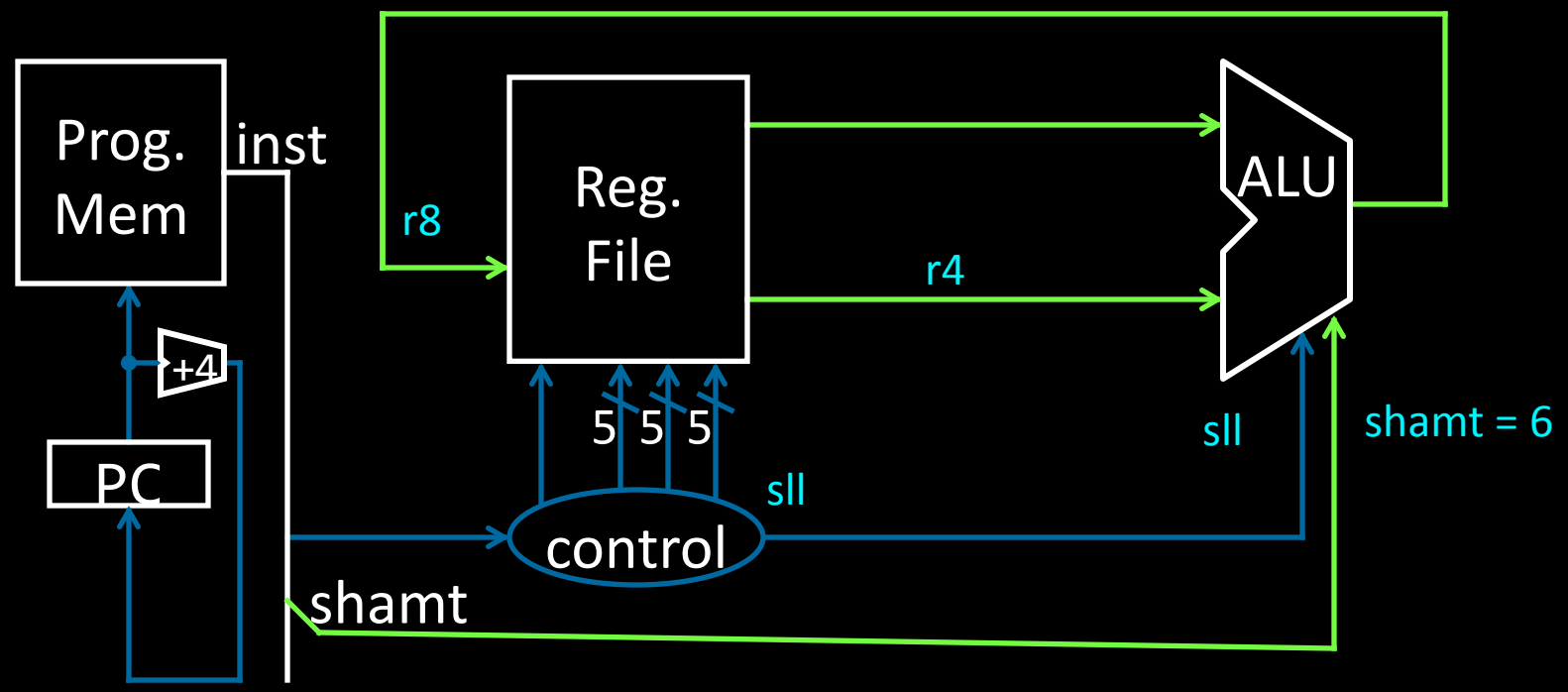
Prog.
Mem
inst
r8
Reg.
File
ALU
r4
+4
PC
5 5 5
sll
shamt = 6
sll
control
shamt

Arithmetic Instructions: Immediates

```
001000001010010100000000000000101
```

op	rs	rd	immediate
6 bits	5 bits	5 bits	16 bits

I-Type

op	mnemonic	description
0x8	ADDI rd, rs, imm	R[rd] = R[rs] + imm
0xc	ANDI rd, rs, imm	R[rd] = R[rs] & imm
0xd	ORI rd, rs, imm	R[rd] = R[rs] | imm

ex: r5 = r5 + 5 # ADDI r5, r5, 5

r5 += 5

What if immediate is negative?

ex: r5 += -1

Immediates

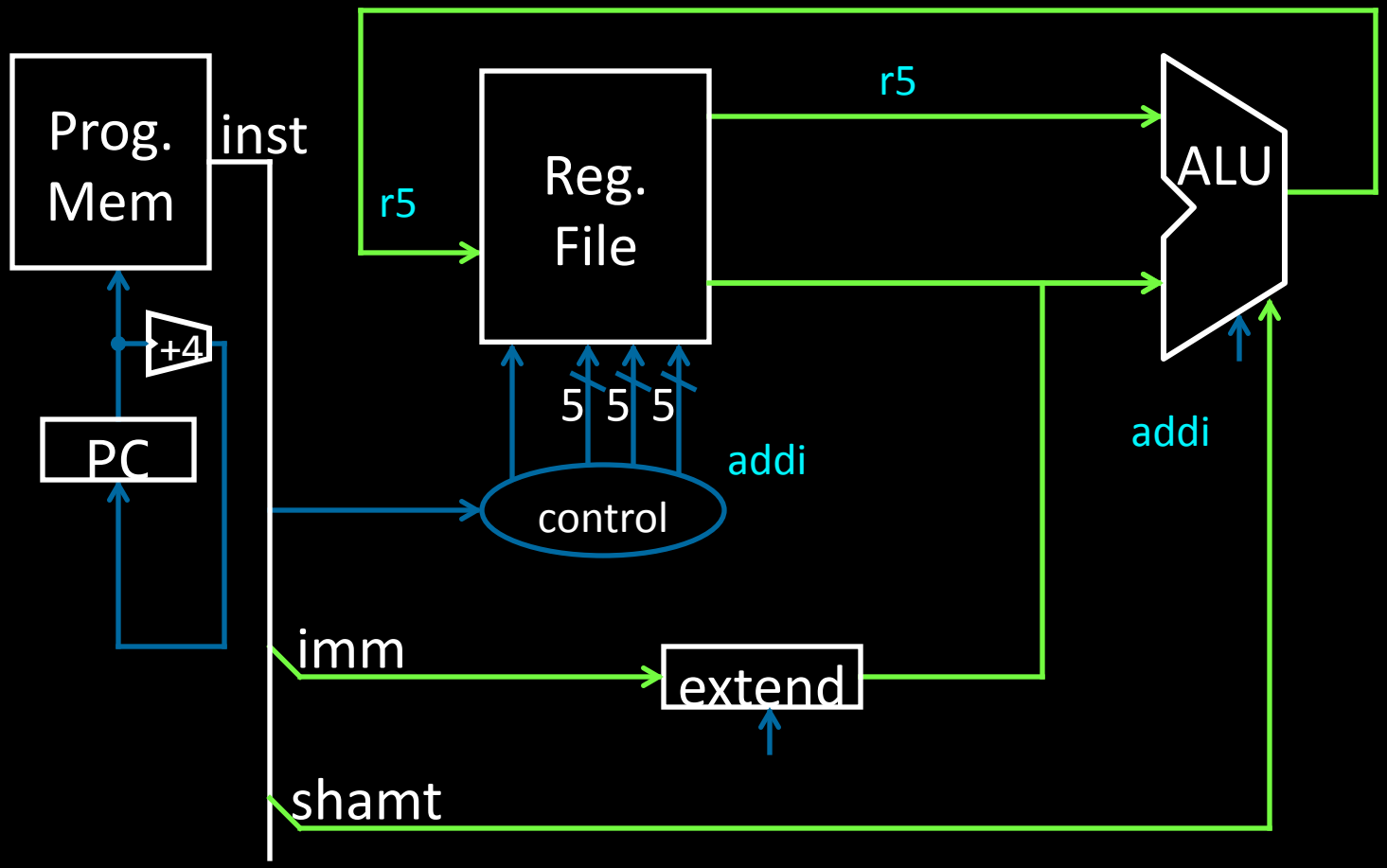
Prog.
Mem
inst
r5
Reg.
File
r5
ALU
+4
PC
5 5 5
addi
control
addi
imm
extend
shamt

Immediates

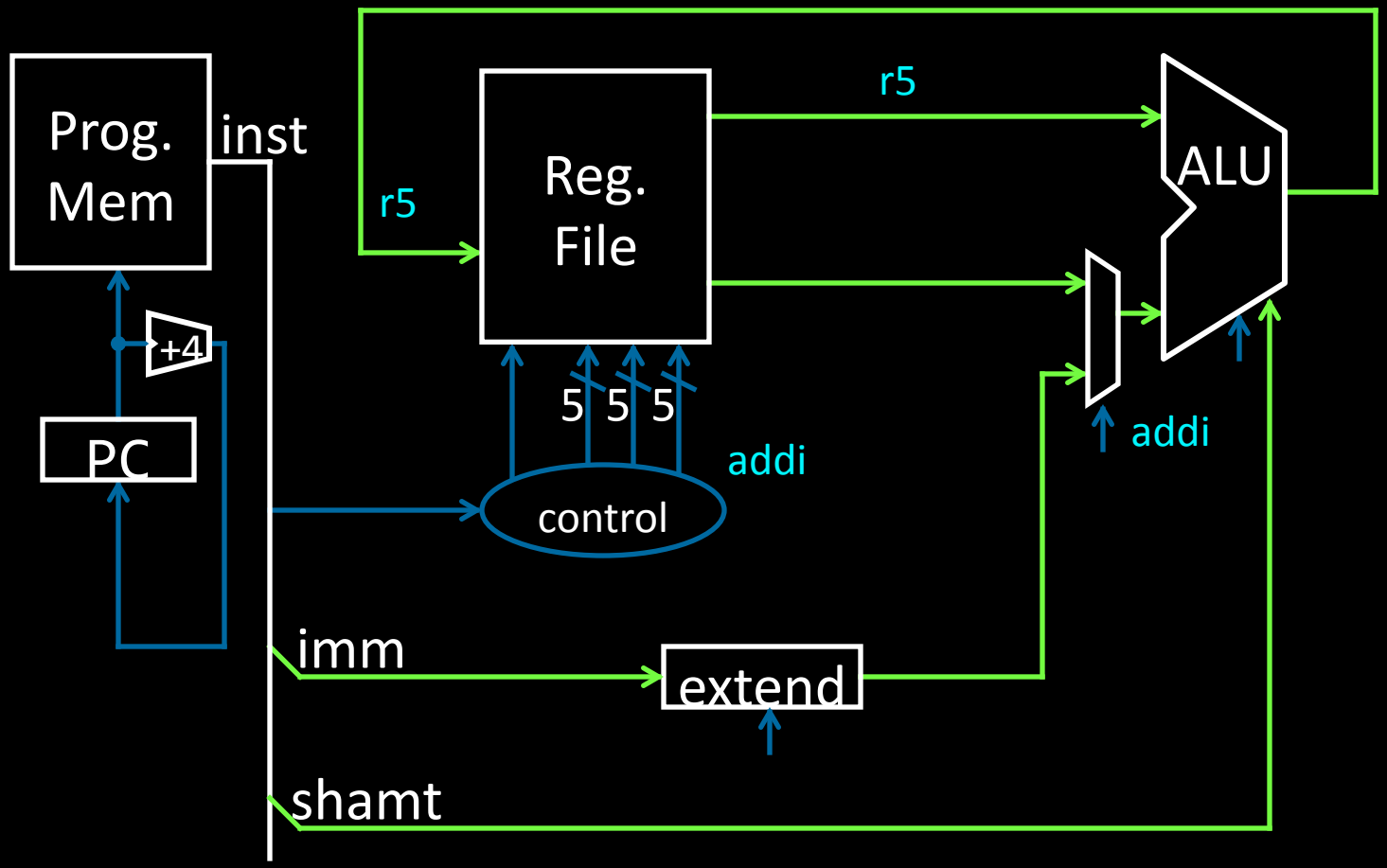
Prog.
Mem
inst
+4
PC
r5
Reg.
File
r5
ALU
5 5 5
addi
control
addi
imm
extend
shamt

Arithmetic Instructions: Immediates

```
001111000000001010000000000000101
```

op	-	rd	immediate
6 bits	5 bits	5 bits	16 bits

I-Type

op	mnemonic	description
0xF	LUI rd, imm	R[rd] = imm << 16

ex: r5 = 0x50000 # LUI r5, 5

ex: LUI r5, 0xdead
ORI r5, r5 0xbeef

What does r5 = ?
r5 = 0xdeadbeef

Immediates

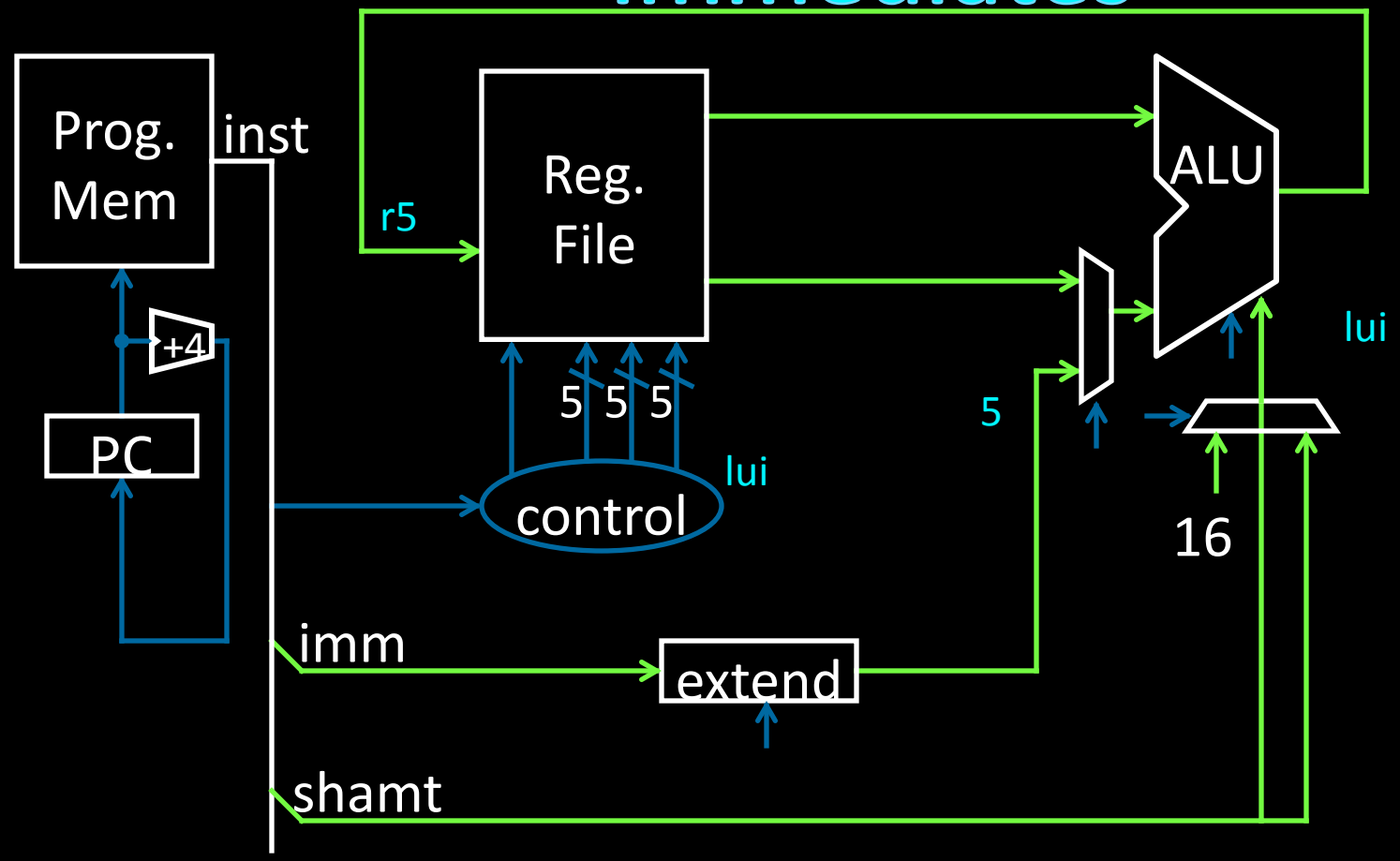
Prog.
Mem
inst
+4
PC
r5
Reg.
File
ALU
lui
5 5 5
5
lui
control
16
imm
extend
shamt

Goals for today

MIPS Datapath

- Memory layout
- Control Instructions

Performance

- How fast can we make it?
- CPI (Cycles Per Instruction)
- MIPS (Instructions Per Cycle)
- Clock Frequency

MIPS Instruction Types

Arithmetic/Logical

- R-type: result and two source registers, shift amount
- I-type: 16-bit immediate with sign/zero extension

Memory Access

- load/store between registers and memory
- word, half-word and byte operations

Control flow

- conditional branches: pc-relative addresses
- jumps: fixed offsets, register absolute

Memory Instructions

`101011 00101 00001 0000000000000100`

I-Type

op	rs	rd	offset
6 bits	5 bits	5 bits	16 bits

base + offset addressing

op	mnemonic	description
0x23	LW rd, offset(rs)	R[rd] = Mem[offset+R[rs]]
0x2b	SW rd, offset(rs)	Mem[offset+R[rs]] = R[rd]

signed offsets

ex: = Mem[4+r5] = r1 # SW r1, 4(r5)

Memory Operations

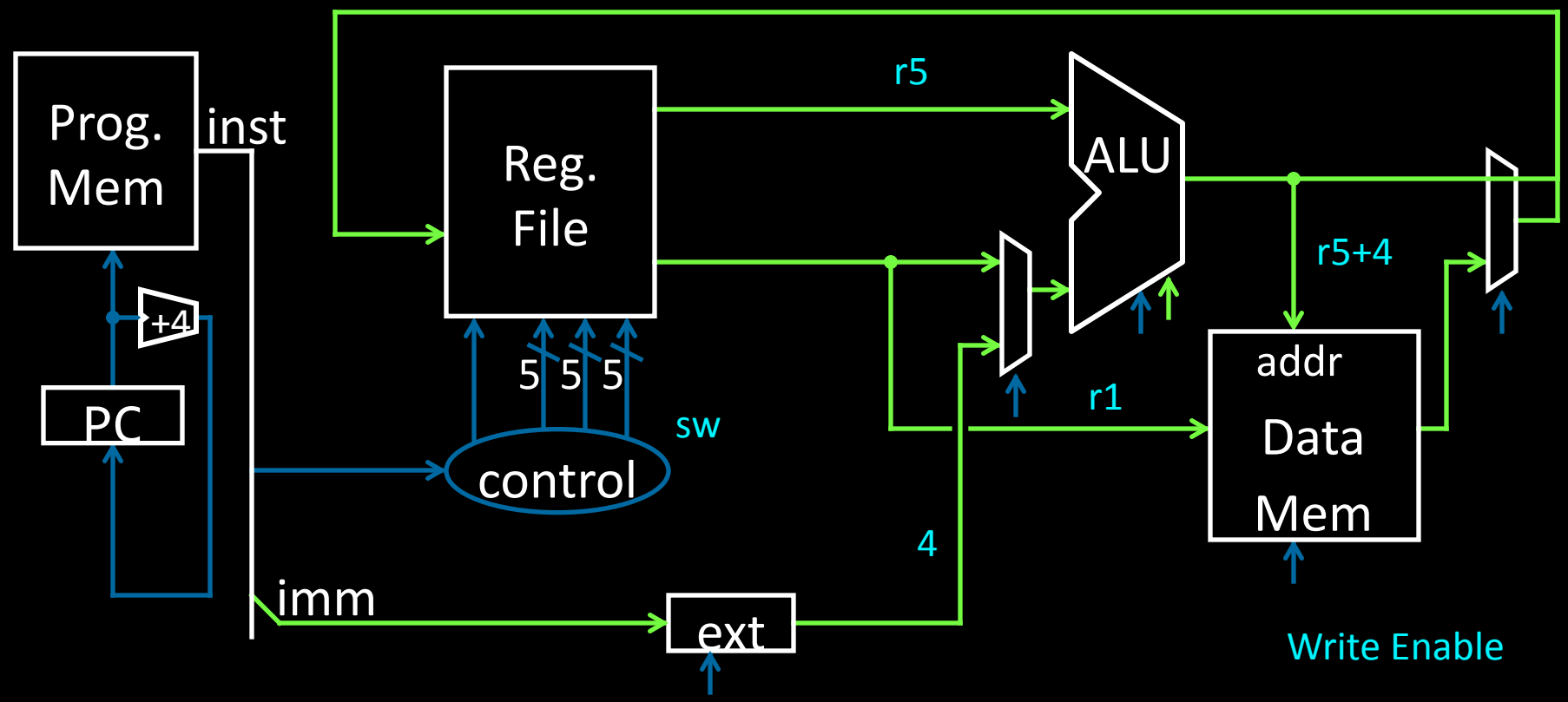

ex: = Mem[4+r5] = r1 # SW r1, 4(r5)

Memory Instructions

101011 00101 00001 0000000000000100

op rs rd offset

6 bits 5 bits 5 bits 16 bits

op	mnemonic	description
0x20	LB rd, offset(rs)	R[rd] = sign_ext(Mem[offset+R[rs]])
0x24	LBU rd, offset(rs)	R[rd] = zero_ext(Mem[offset+R[rs]])
0x21	LH rd, offset(rs)	R[rd] = sign_ext(Mem[offset+R[rs]])
0x25	LHU rd, offset(rs)	R[rd] = zero_ext(Mem[offset+R[rs]])
0x23	LW rd, offset(rs)	R[rd] = Mem[offset+R[rs]]
0x28	SB rd, offset(rs)	Mem[offset+R[rs]] = R[rd]
0x29	SH rd, offset(rs)	Mem[offset+R[rs]] = R[rd]
0x2b	SW rd, offset(rs)	Mem[offset+R[rs]] = R[rd]

Endianness

Endianness: Ordering of bytes within a memory word

Little Endian = least significant part first (MIPS, x86)

	1000	1001	1002	1003
as 4 bytes	0x78	0x56	0x34	0x12
as 2 halfwords	0x5678		0x1234	
as 1 word	0x12345678			

Big Endian = most significant part first (MIPS, networks)

	1000	1001	1002	1003
as 4 bytes	0x12	0x34	0x56	0x78
as 2 halfwords	0x1234		0x5678	
as 1 word	0x12345678			

Memory Layout

Examples (big/little endian):

r5 contains 5 (0x00000005)

SB r5, 2(r0)

LB r6, 2(r0)

R[r6] = 0x05

SW r5, 8(r0)

LB r7, 8(r0)

LB r8, 11(r0)

R[r7] = 0x00

R[r8] = 0x05

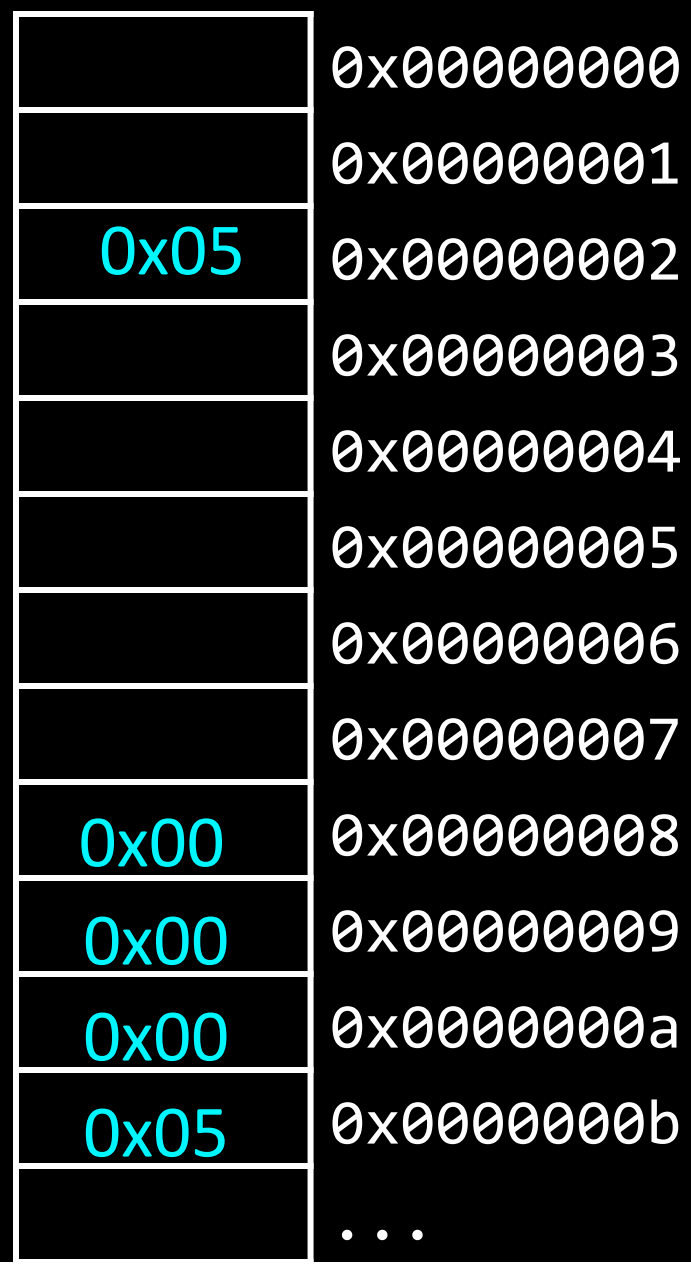

MIPS Instruction Types

Arithmetic/Logical

- R-type: result and two source registers, shift amount
- I-type: 16-bit immediate with sign/zero extension

Memory Access

- load/store between registers and memory
- word, half-word and byte operations

Control flow

- conditional branches: pc-relative addresses
- jumps: fixed offsets, register absolute

Control Flow: Absolute Jump

000010101000010010000110000000011

op — 6 bits

immediate — 26 bits

J-Type

op	Mnemonic	Description
0x2	J target	PC = $(PC+4)_{31..28}$ • target • 00

$(PC+4)_{31..28}$ — 4 bits

target — 26 bits

00 — 2 bits

$(PC+4)_{31..28}$ 01000000000000000000000000 00

ex: j 0x1000000

PC = ((PC+4) & 0xf0000000) | 0x04000000

Control Flow: Absolute Jump

`000010101000010010000110000000011`

op — immediate

6 bits — 26 bits

J-Type

op	Mnemonic	Description
0x2	J target	PC = $(PC+4)_{31..28}$ • target • 00

Absolute addressing for jumps

$(PC+4)_{31..28}$ will be the same

- Jump from 0x30000000 to 0x20000000?
  - But: Jumps from 0x2FFFFFFF to 0x3xxxxxxx are possible, but not reverse
- Trade-off: out-of-region jumps vs. 32-bit instruction encoding

MIPS Quirk:

- jump targets computed using *already incremented* PC

Absolute Jump

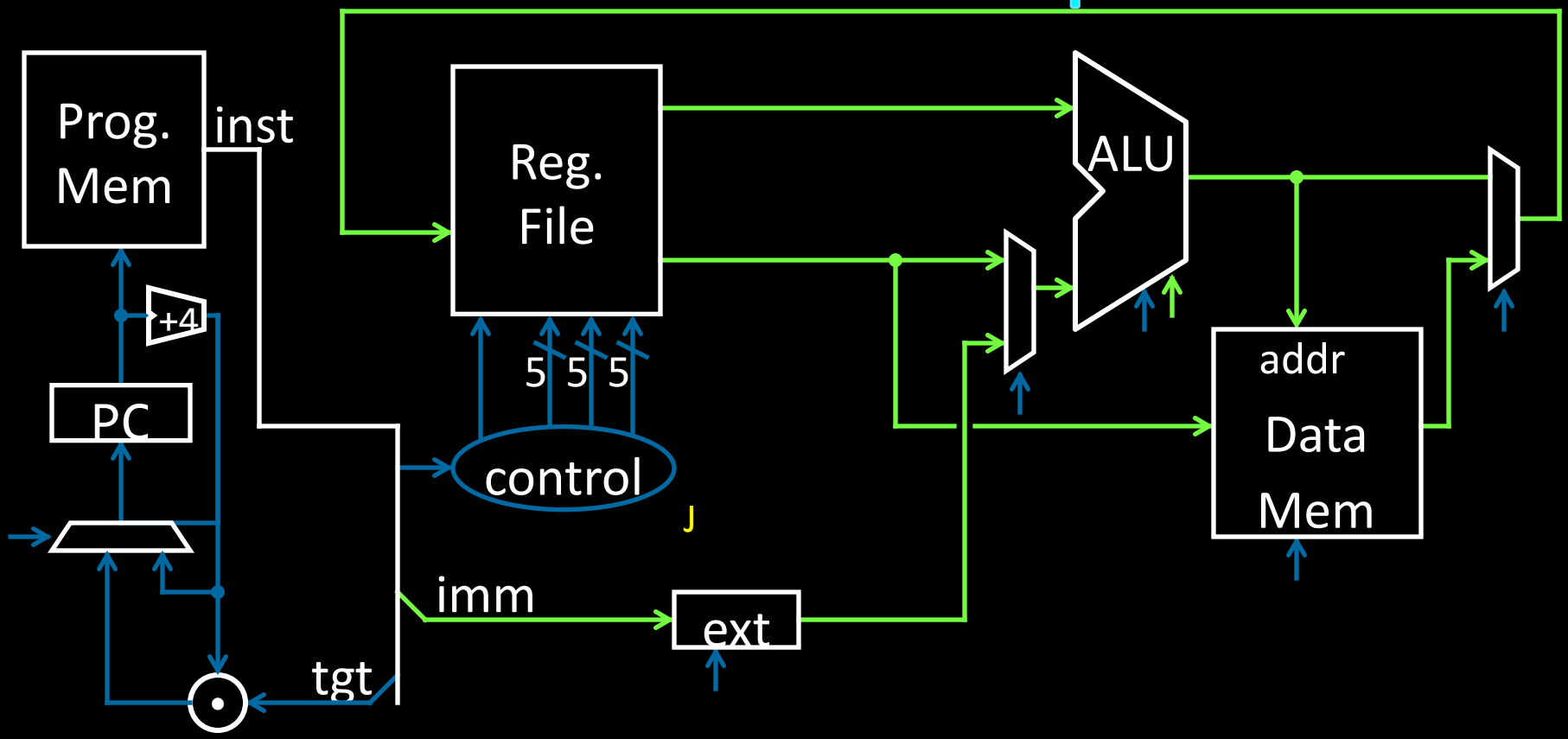

op	Mnemonic	Description
0x2	J target	PC = $(PC+4)_{31..28}$ • target • 00

Control Flow: Jump Register

000000 00011 00000 00000 00000 001000

op	rs	-	-	-	func
6 bits	5 bits	5 bits	5 bits	5 bits	6 bits

R-Type

op	func	mnemonic	description
0x0	0x08	JR rs	PC = R[rs]

ex: JR r3

Jump Register

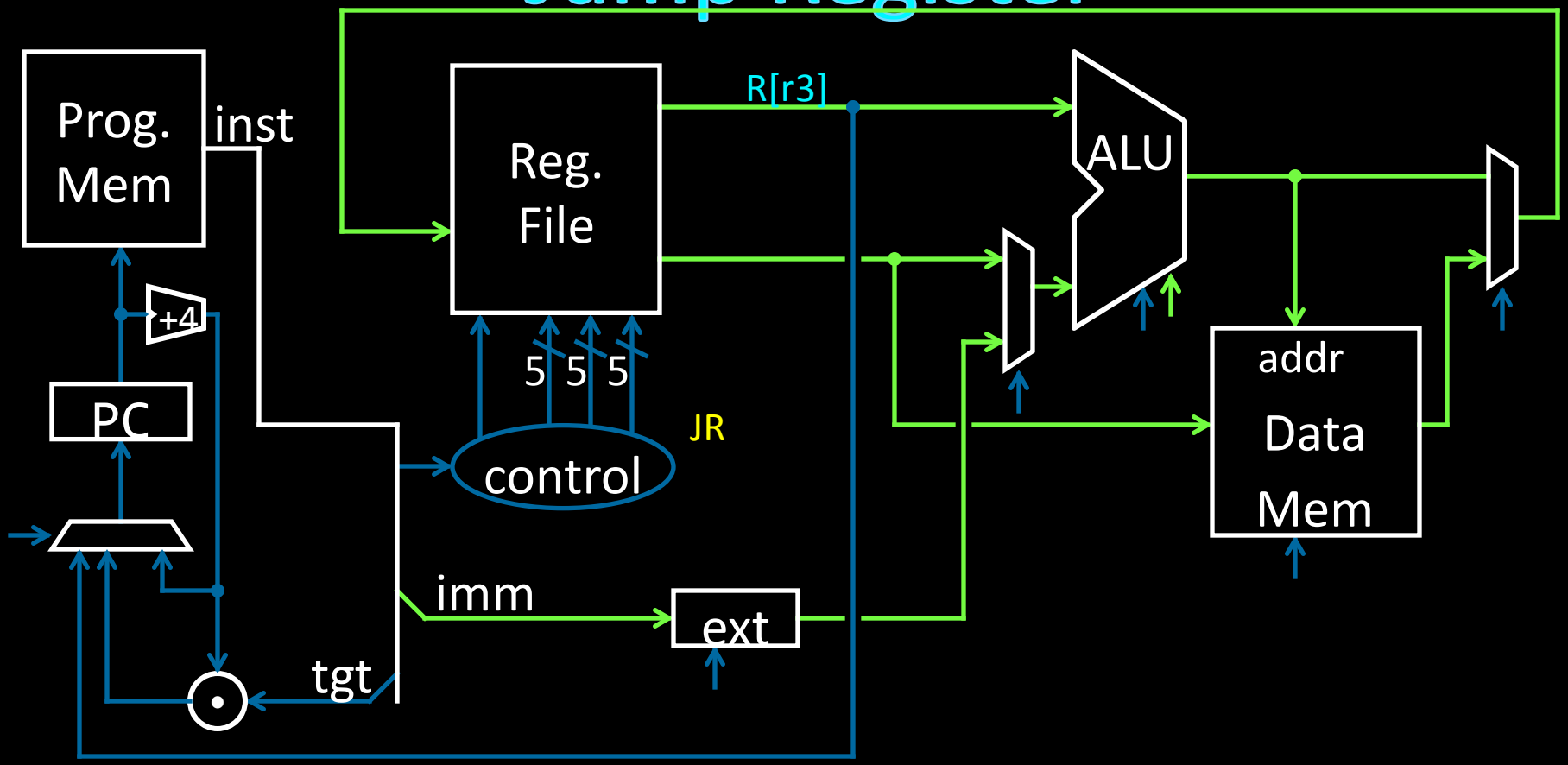

op	func	mnemonic	description
0x0	0x08	JR rs	PC = R[rs]

Examples

E.g. Use Jump or Jump Register instruction to jump to 0xabcd1234

But, what about a jump based on a condition?

```
# assume 0 <= r3 <= 1
if (r3 == 0) jump to 0xdecafe00
else jump to 0xabcd1234
```

Control Flow: Branches

000100001010000100000000000011

op	rs	rd	offset
6 bits	5 bits	5 bits	16 bits

I-Type

signed offsets

op	mnemonic	description
0x4	BEQ rs, rd, offset	if R[rs] == R[rd] then PC = PC+4 + (offset<<2)
0x5	BNE rs, rd, offset	if R[rs] != R[rd] then PC = PC+4 + (offset<<2)

ex: BEQ r5, r1, 3

If(R[r5]==R[r1]) then PC = PC+4 + 12

Control Flow: Branches

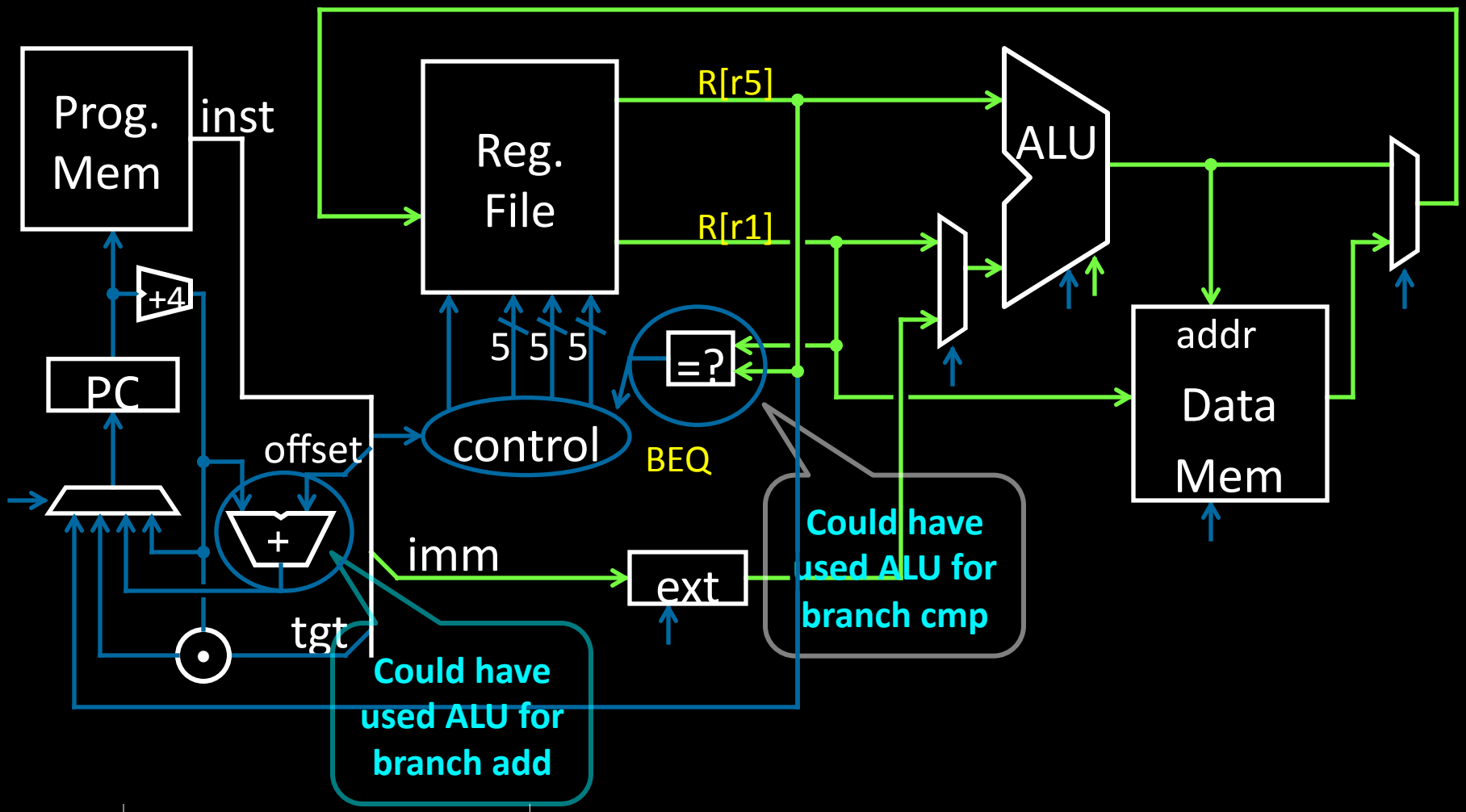

op	mnemonic	description
0x4	BEQ rs, rd, offset	if R[rs] == R[rd] then PC = PC+4 + (offset<<2)
0x5	BNE rs, rd, offset	if R[rs] != R[rd] then PC = PC+4 + (offset<<2)

Control Flow: More Branches

Conditional Jumps (cont.)

000001 00101 00001 0000000000000010

op	rs	subop	offset
6 bits	5 bits	5 bits	16 bits

almost I-Type

signed offsets

op	subop	mnemonic	description
0x1	0x0	BLTZ rs, offset	if R[rs] < 0 then PC = PC+4+ (offset<<2)
0x1	0x1	BGEZ rs, offset	if R[rs] ≥ 0 then PC = PC+4+ (offset<<2)
0x6	0x0	BLEZ rs, offset	if R[rs] ≤ 0 then PC = PC+4+ (offset<<2)
0x7	0x0	BGTZ rs, offset	if R[rs] > 0 then PC = PC+4+ (offset<<2)

ex: BGEZ r5, 2

If(R[r5] ≥ 0) then PC = PC+4 + 8

Control Flow: More Branches

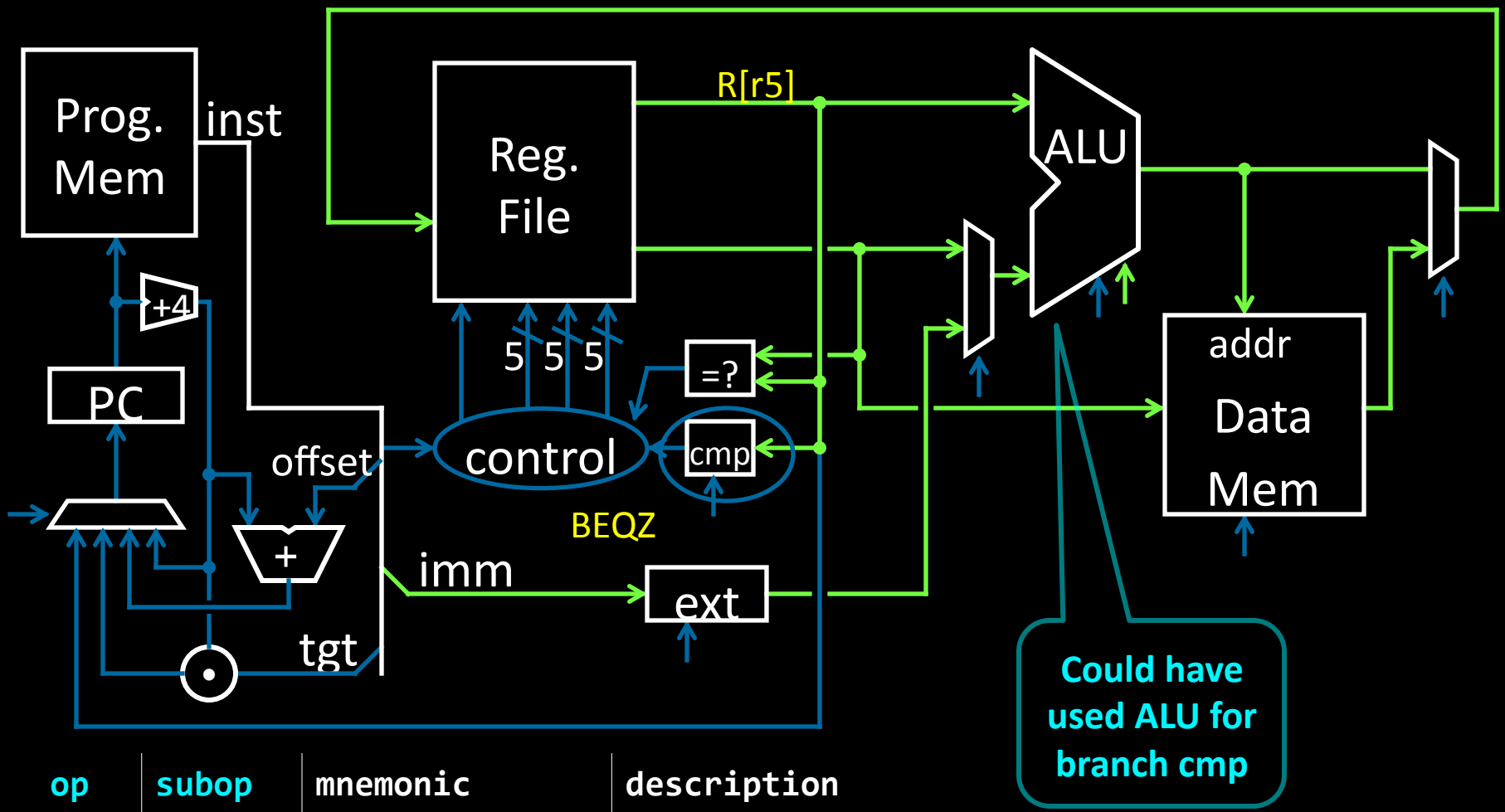

op	subop	mnemonic	description
0x1	0x0	BLTZ rs, offset	if R[rs] < 0 then PC = PC+4+ (offset<<2)
0x1	0x1	BGEZ rs, offset	if R[rs] ≥ 0 then PC = PC+4+ (offset<<2)
0x6	0x0	BLEZ rs, offset	if R[rs] ≤ 0 then PC = PC+4+ (offset<<2)
0x7	0x0	BGTZ rs, offset	if R[rs] > 0 then PC = PC+4+ (offset<<2)

Control Flow: Jump and Link

Why? Function/procedure calls

000011 00000000100100001100000010

op — immediate

6 bits — 26 bits

J-Type

Discuss later

op	mnemonic	description
0x3	JAL target	r31 = PC+8 (+8 due to branch delay slot) PC = $(PC+4)_{31..28}$ • target • 00

ex: JAL 0x1000000

r31 = PC+8

PC = $(PC+4)_{31..28}$• 0x4000000

op	mnemonic	description
0x2	J target	PC = $(PC+4)_{31..28}$ • target • 00

Jump and Link

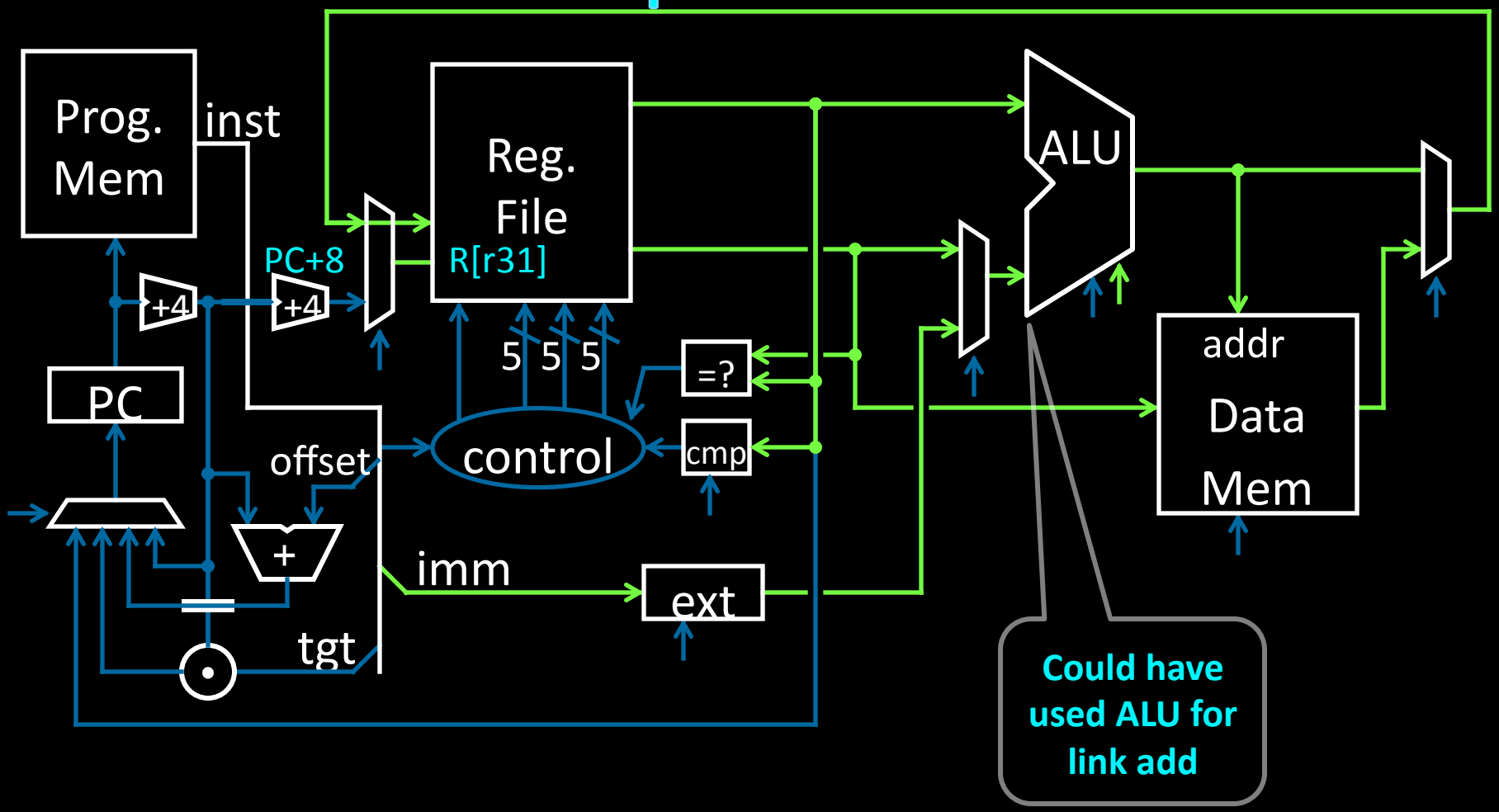

op	mnemonic	description
0x3	JAL target	r31 = PC+8 (+8 due to branch delay slot) PC = $(PC+4)_{31..28}$ || (target << 2)

Goals for today

MIPS Datapath

- Memory layout
- Control Instructions

Performance

- How to get it?
- CPI (Cycles Per Instruction)
- MIPS (Instructions Per Cycle)
- Clock Frequency

Pipelining

- Latency vs throughput

Questions

How do we measure performance?

What is the performance of a single cycle CPU?

How do I get performance?

See: P&H 1.4

What instruction has the longest path

A) LW

B) SW

C) ADD/SUB/AND/OR/etc

D) BEQ

E) J

Memory Operations

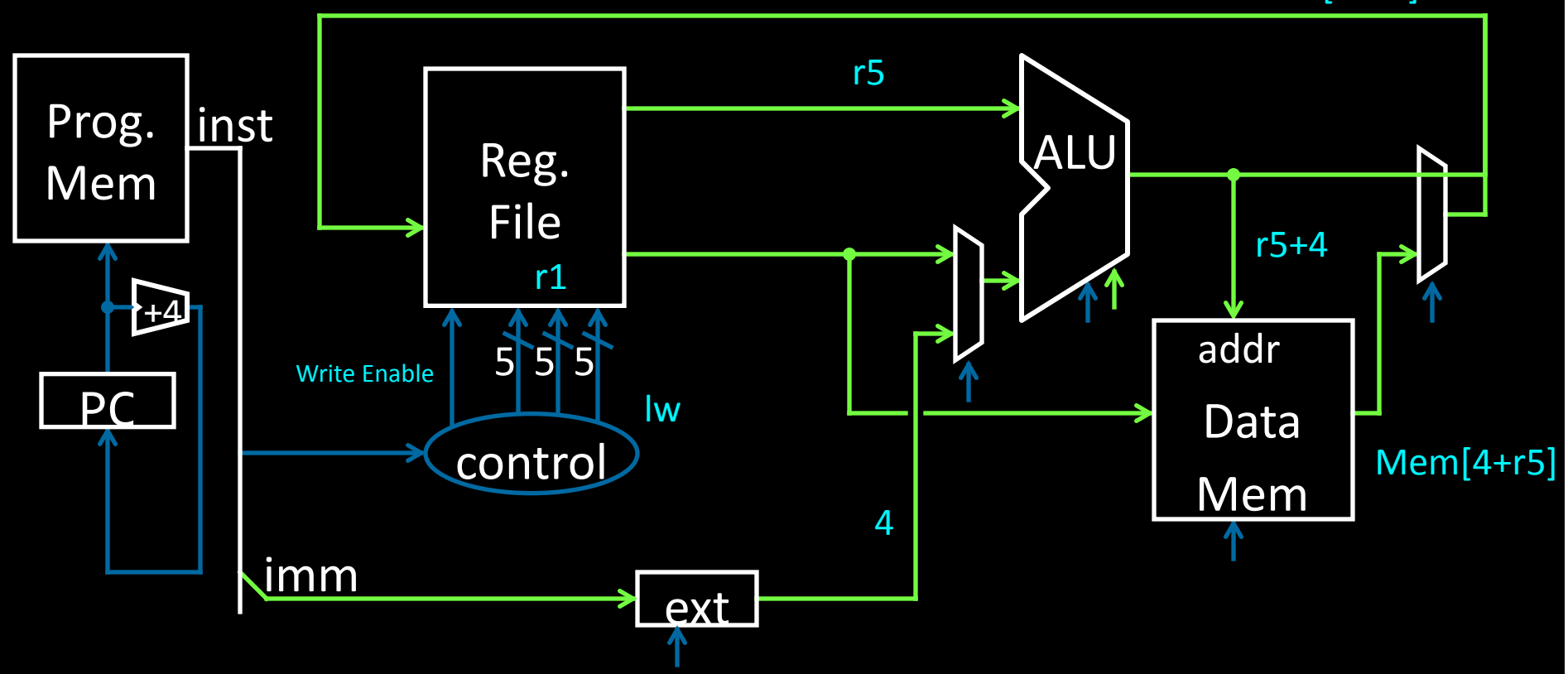

ex: = r1 = Mem[4+r5] # LW r1, 4(r5)

Performance

How do I get it?

- Parallelism
- Pipelining
- Both!

Performance: Aside

Speed of a circuit is affected by the number of gates in series (on the *critical path* or the *deepest level of logic*)

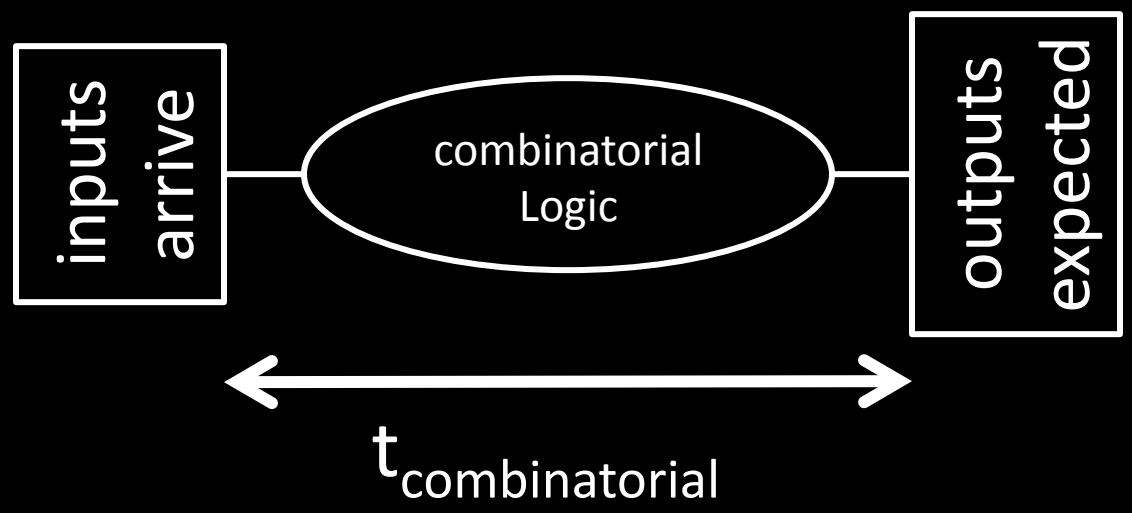

4-bit Ripple Carry Adder

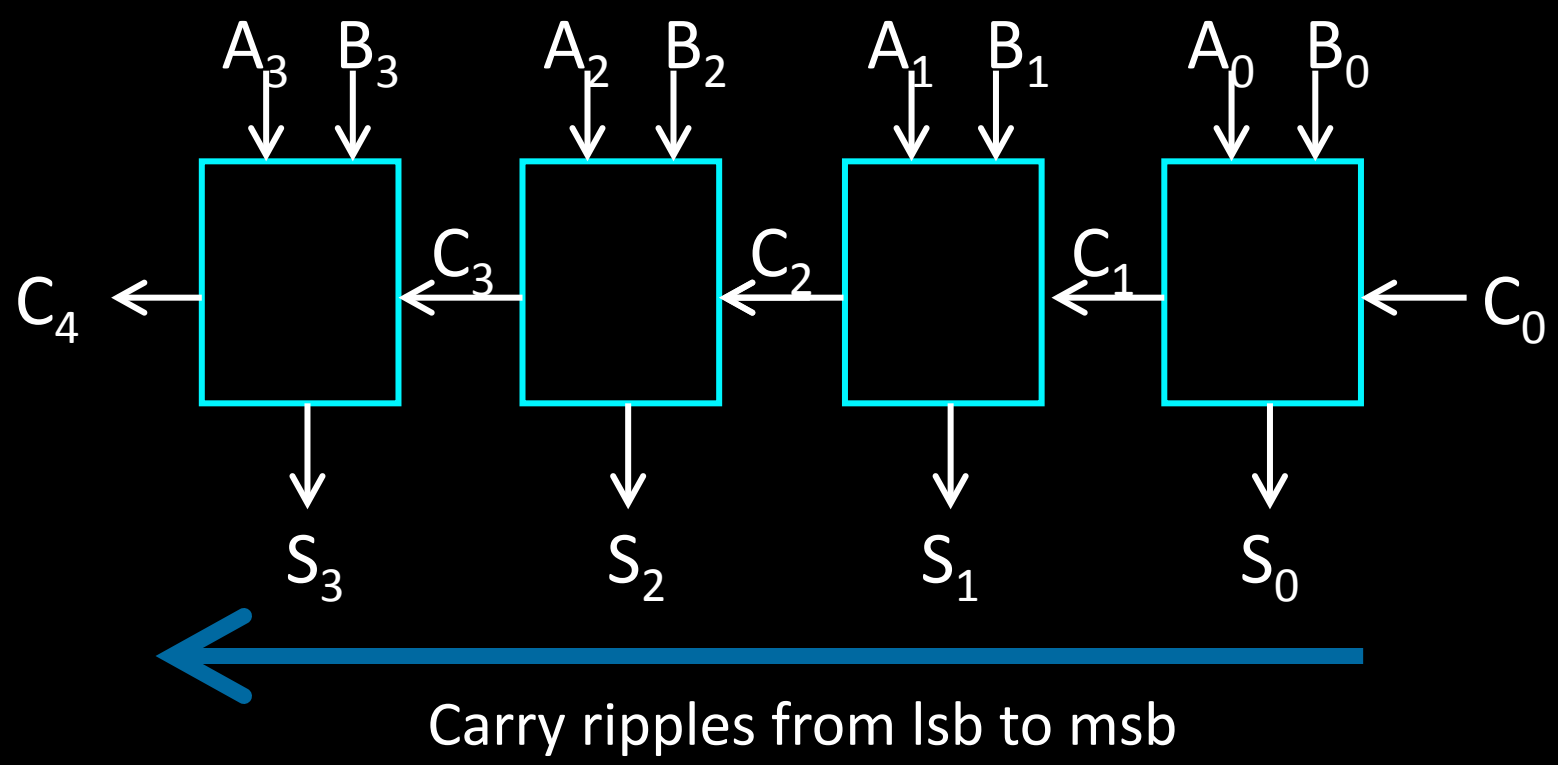

- First full adder, 2 gate delay
- Second full adder, 2 gate delay
- …

Adding

Main ALU, slows us down

Does it need to be this slow?

Observations

- Have to wait for Cin
- Can we compute in parallel in some way?
- CLA carry look-ahead adder

Carry Look Ahead Logic

Can we reason independent of Cin?

- Just based on (A,B) only

When is Cout == 1, irrespective of Cin

If Cin == 1, when is Cout also == 1

1-bit Adder with Carry

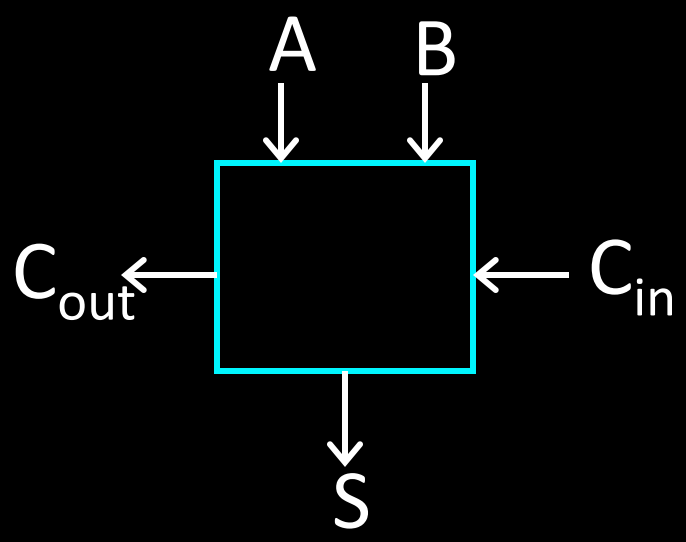

Full Adder

- Adds three 1-bit numbers
- Computes 1-bit result and 1-bit carry
- Can be cascaded

A	B	C_{in}	C_{out}	S
0	0	0	0	0
0	1	0	0	1
1	0	0	0	1
1	1	0	1	0
0	0	1	0	1
0	1	1	1	0
1	0	1	1	0
1	1	1	1	1

1-bit CLA adder

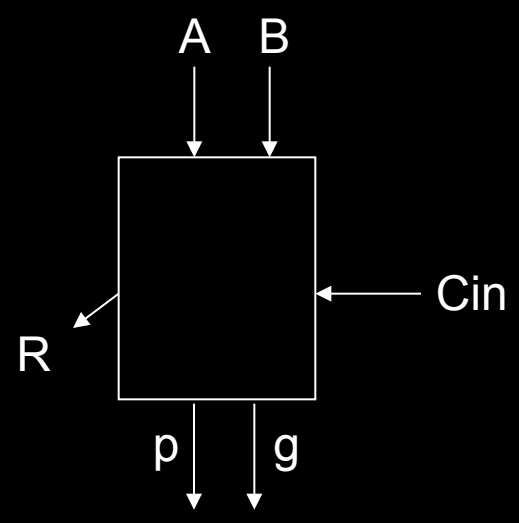

Create two terms: propagator, generator

g = 1, generates Cout: g = AB

- Irrespective of Cin

p = 1, propagates Cin to Cout: p = A + B

p and g generated in 1 cycle delay

R is 2 cycle delay after we get Cin

1-bit Adder with Carry

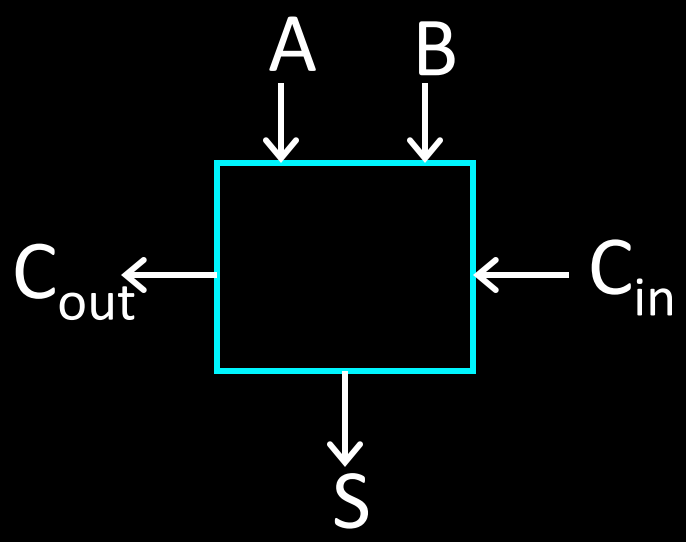

Full Adder

- Adds three 1-bit numbers
- Computes 1-bit result and 1-bit carry
- Can be cascaded

A	B	C_{in}	C_{out}	S
0	0	0	0	0
0	1	0	0	1
1	0	0	0	1
1	1	0	1	0
0	0	1	0	1
0	1	1	1	0
1	0	1	1	0
1	1	1	1	1

4-bit CLA

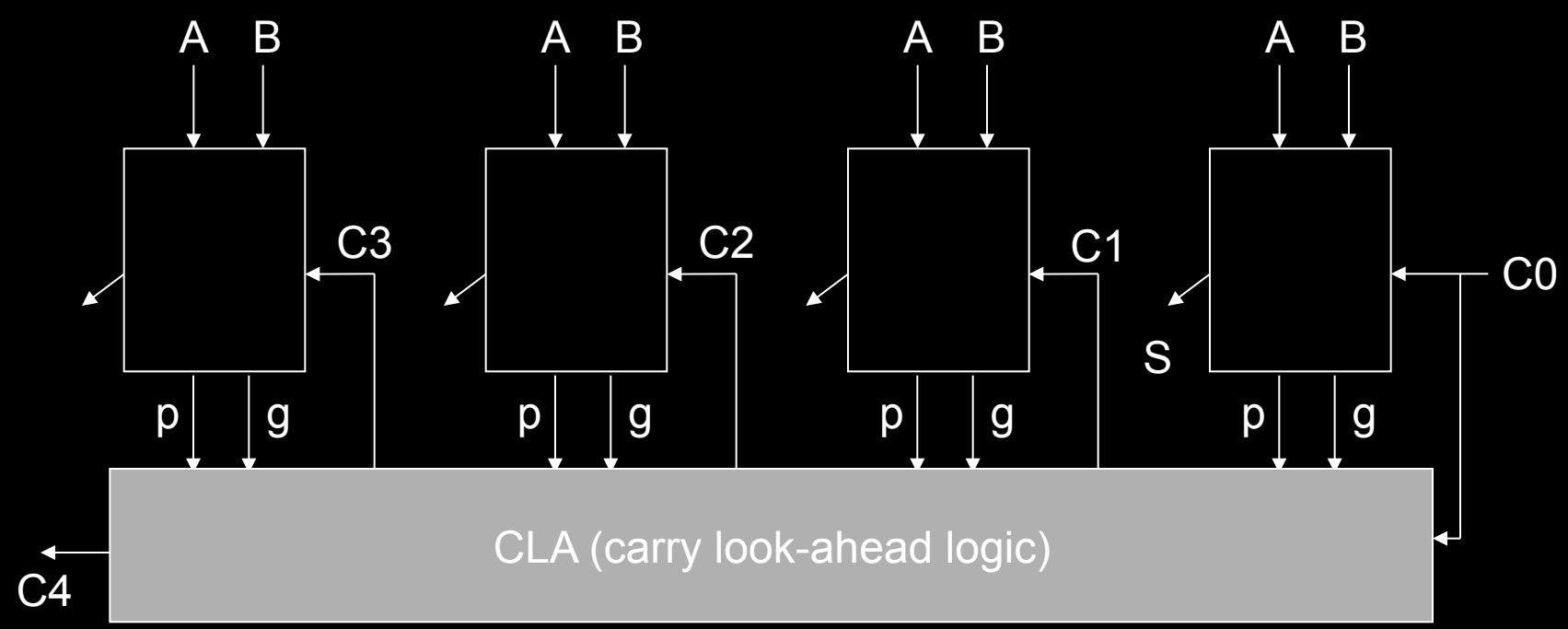

- CLA takes p,g from all 4 bits, C0 and generates all Cs: 2 gate delay

$$C_1 = g_0 + p_0C_0$$
$$C_2 = g_1 + p_1C_1 = g_1 + p_1(g_0 + p_0C_0) = g_1 + p_1g_0 + p_1p_0C_0$$
$$C_3 = g_2 + p_2C_2 = g_2 + p_2g_1 + p_2p_1g_0 + p_2p_1p_0C_0$$
$$C_4 = g_3 + p_3C_3 = g_3 + p_3g_2 + p_3p_2g_1 + p_3p_2p_1g_0 + p_3p_2p_1p_0C_0$$

C_i = Function (C_0, p and g values)

4-bit CLA

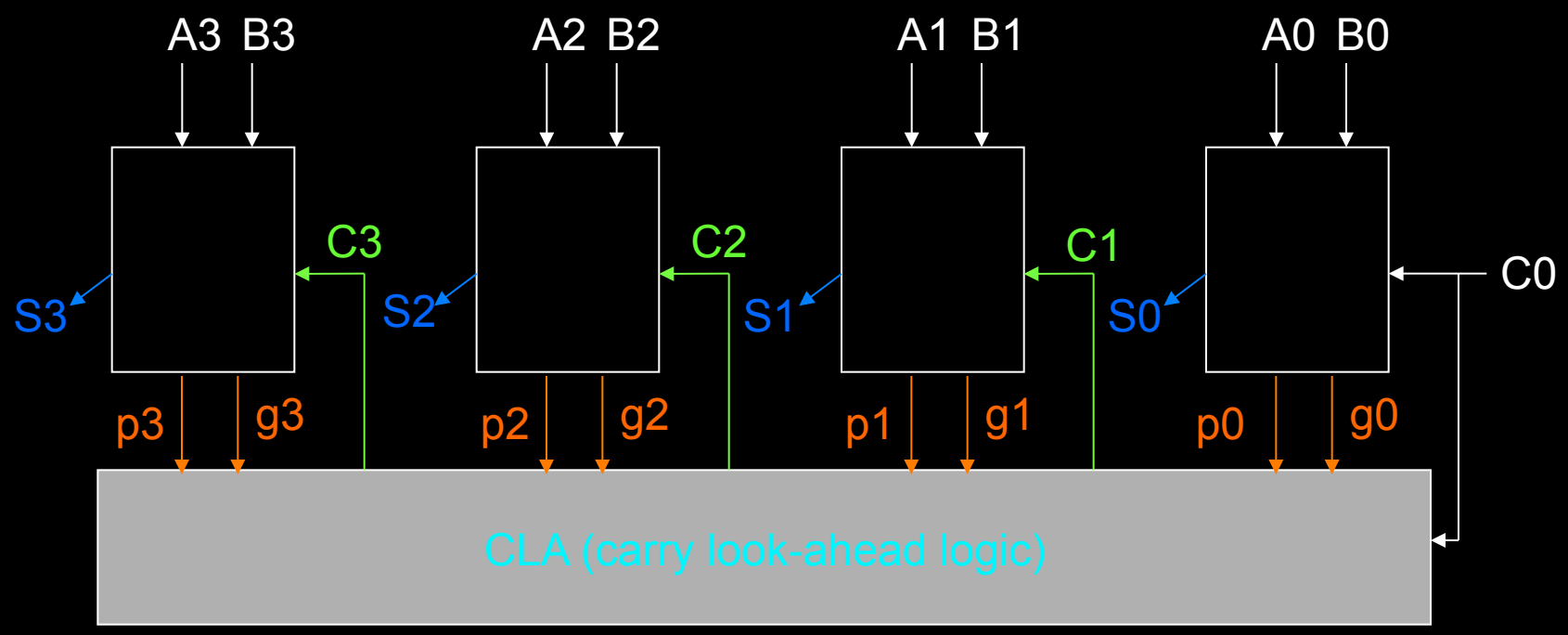

- Given A,B's, all p,g's are generated in 1 gate delay in parallel
- Given all p,g's, all C's are generated in 2 gate delay in parallel
- Given all C's, all S's are generated in 2 gate delay in parallel

Sequential operation is made into parallel operation!!

Performance

Ripple carry adder vs carry lookahead adder for 8 bits

- 2 x 8 vs. 5

Performance

How do I get it?

- Parallelism
- Pipelining
- Both!