I/O

Hakim Weatherspoon
CS 3410, Spring 2013
Computer Science
Cornell University

See: P&H Chapter 6.5-6

Goals for Today

Computer System Organization

How does a processor interact with its environment?

- I/O Overview

How to talk to device?

- Programmed I/O or Memory-Mapped I/O

How to get events?

- Polling or Interrupts

How to transfer lots of data?

- Direct Memory Access (DMA)

Next Goal

How does a processor interact with its environment?

Big Picture: Input/Output (I/O)

How does a processor interact with its environment?

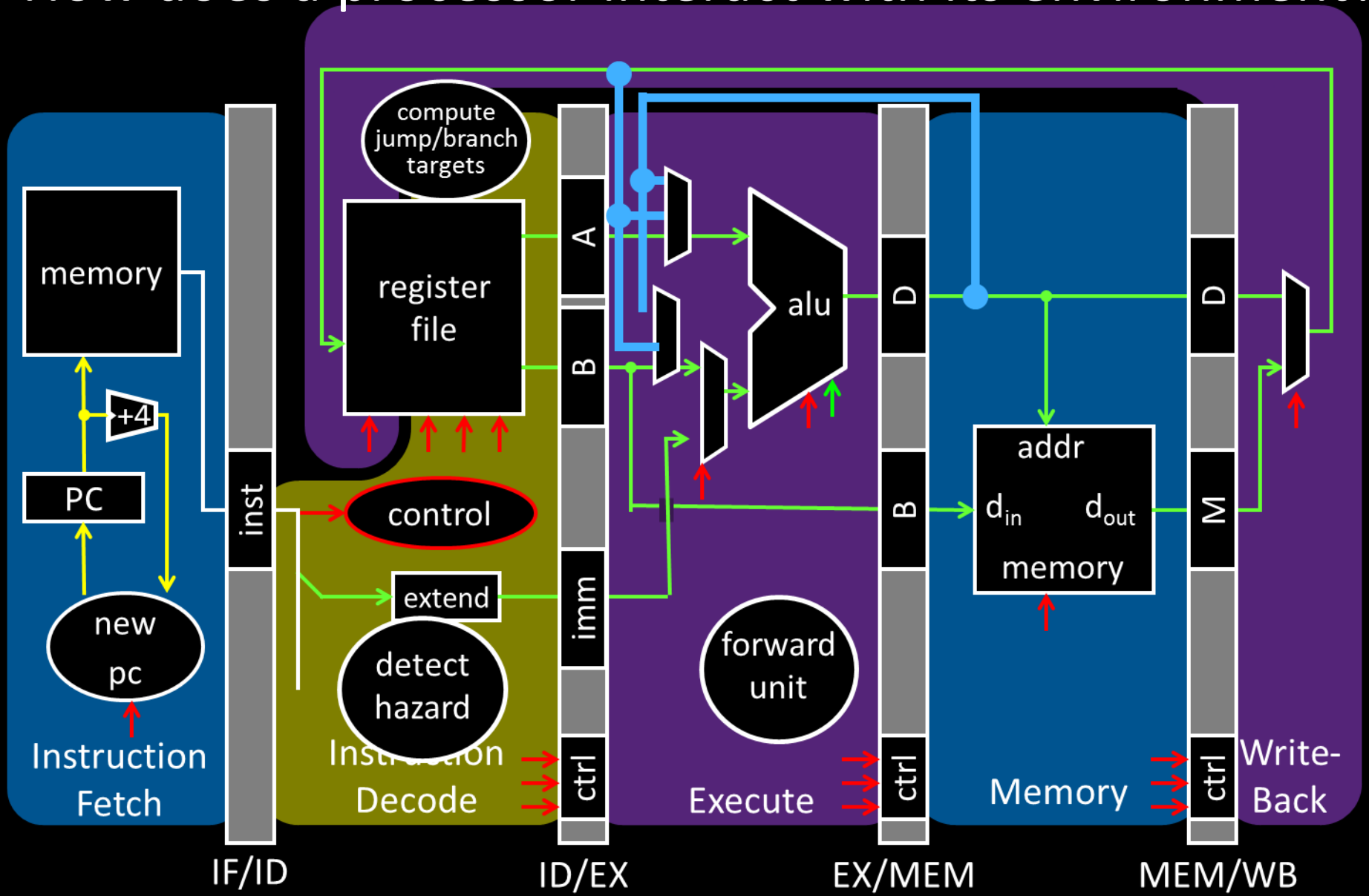

Big Picture: Input/Output (I/O)

How does a processor interact with its environment?

Computer System Organization =

Memory +

Datapath +

Control +

Input +

Output

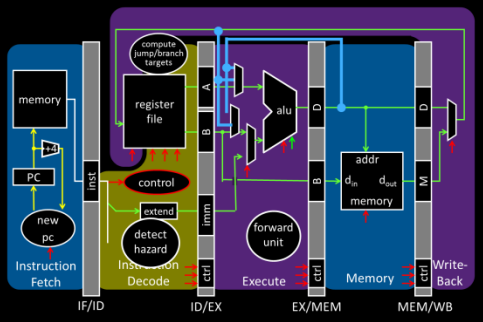

I/O Devices Enables Interacting with Environment

Device	Behavior	Partner	Data Rate (b/sec)
Keyboard	Input	Human	100
Mouse	Input	Human	3.8k
Sound Input	Input	Machine	3M
Voice Output	Output	Human	264k
Sound Output	Output	Human	8M
Laser Printer	Output	Human	3.2M
Graphics Display	Output	Human	800M – 8G
Network/LAN	Input/Output	Machine	100M – 10G
Network/Wireless LAN	Input/Output	Machine	11 – 54M
Optical Disk	Storage	Machine	5 – 120M
Flash memory	Storage	Machine	32 – 200M
Magnetic Disk	Storage	Machine	800M – 3G

Attempt#1: All devices on one interconnect

Replace ***all*** devices as the interconnect changes

e.g. keyboard speed == main memory speed ?!

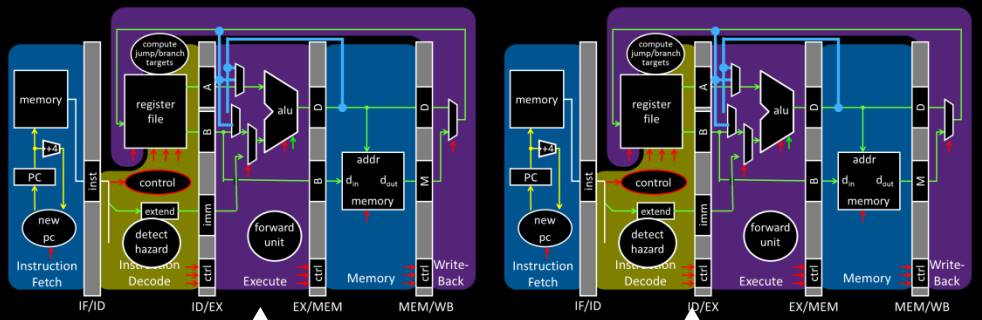

Unified Memory and I/O Interconnect

Memory

Display

Disk

Keyboard

Network

Attempt#2: I/O Controllers

Decouple I/O devices from Interconnect

Enable smarter I/O interfaces

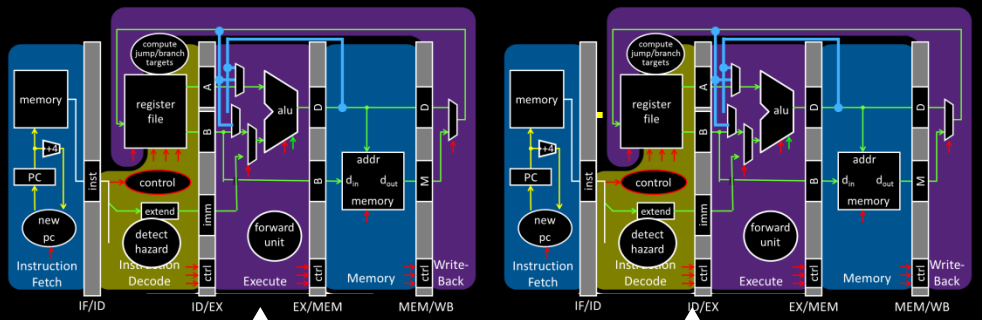

Unified Memory and I/O Interconnect

Memory Controller

Memory

I/O Controller

Display

I/O Controller

Disk

I/O Controller

Keyboard

I/O Controller

Network

Attempt#3: I/O Controllers + Bridge

Separate high-performance processor, memory, display interconnect from lower-performance interconnect

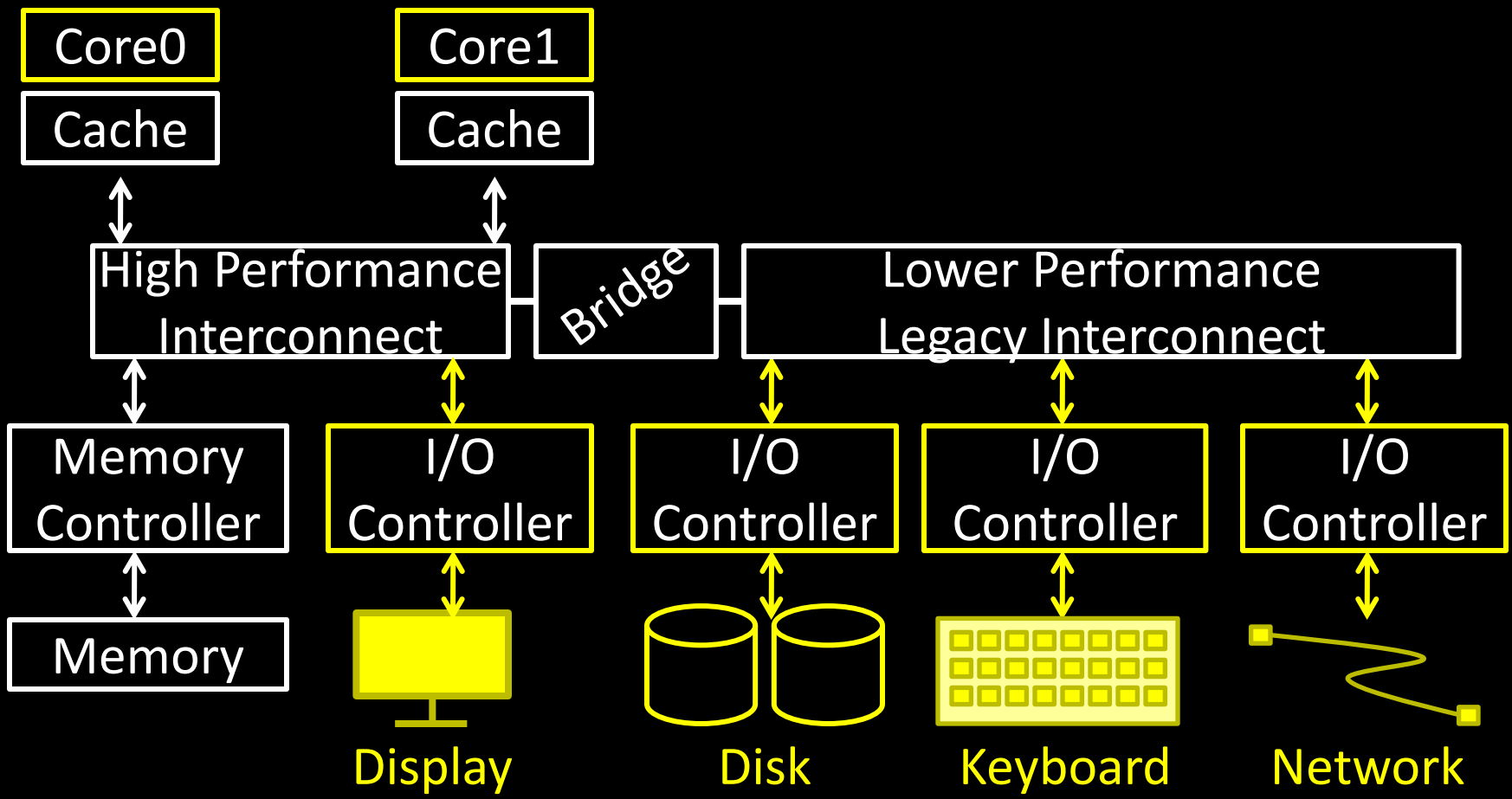

Bus Parameters

Width = number of wires

Transfer size = data words per bus transaction

Synchronous (with a bus clock)
or asynchronous (no bus clock / “self clocking”)

Bus Types

Processor – Memory ("Front Side Bus". Also QPI)

- Short, fast, & wide
- Mostly fixed topology, designed as a "chipset"
  - CPU + Caches + Interconnect + Memory Controller

I/O and Peripheral busses (PCI, SCSI, USB, LPC, …)

- Longer, slower, & narrower
- Flexible topology, multiple/varied connections
- Interoperability standards for devices
- Connect to processor-memory bus through a bridge

Attempt#3: I/O Controllers + Bridge

Separate high-performance processor, memory, display interconnect from lower-performance interconnect

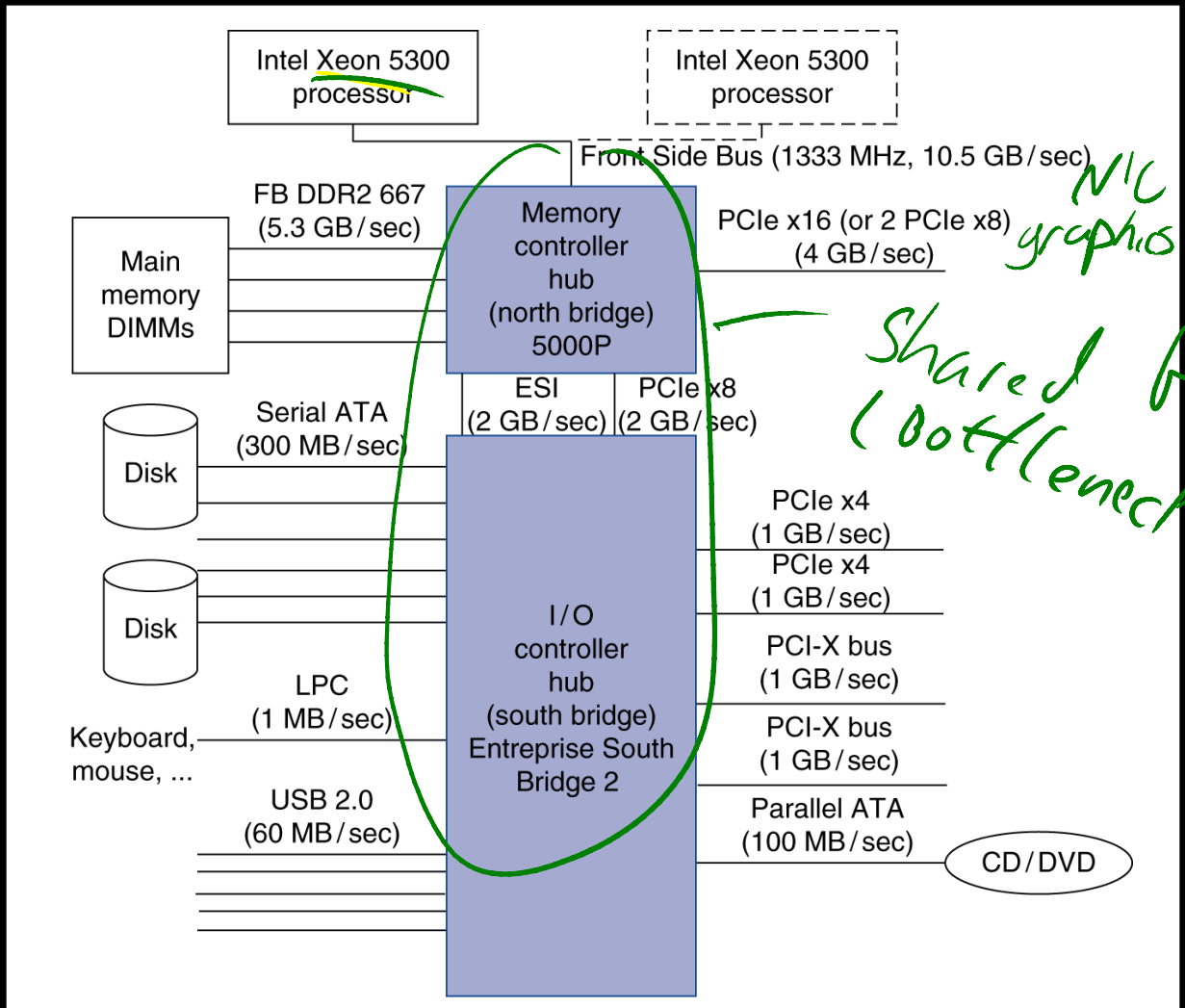

Example Interconnects

Name	Use	Devics per channel	Channel Width	Data Rate (B/sec)
Firewire 800	External	63	4	100M
USB 2.0	External	127	2	60M
Parallel ATA	Internal	1	16	133M
Serial ATA (SATA)	Internal	1	4	300M
PCI 66MHz	Internal	1	32-64	533M
PCI Express v2.x	Internal	1	2-64	16G/dir
Hypertransport v2.x	Internal	1	2-64	25G/dir
QuickPath (QPI)	Internal	1	40	12G/dir

Interconnecting Components

Interconnects are (were?) busses

- parallel set of wires for data and control
- shared channel
  - multiple senders/receivers
  - everyone can see all bus transactions
- bus protocol: rules for using the bus wires

e.g. Intel Xeon

Alternative (and increasingly common):

- dedicated point-to-point channels

e.g. Intel Nehalem

Attempt#4: I/O Controllers+Bridge+ NUMA

Remove bridge as bottleneck with Point-to-point interconnects

E.g. Non-Uniform Memory Access (NUMA)

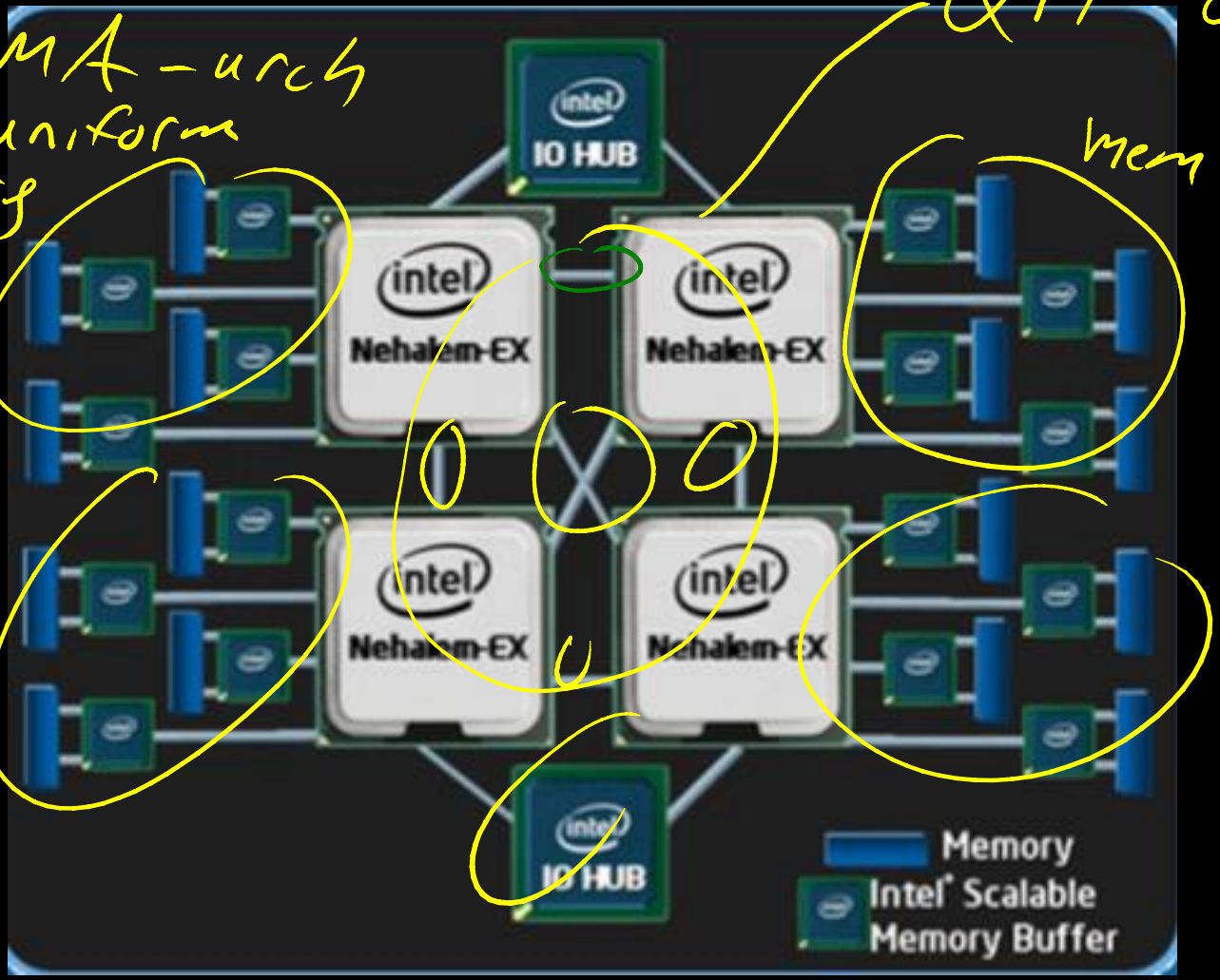

Takeaways

Diverse I/O devices require hierarchical interconnect which is more recently transitioning to point-to-point topologies.

Next Goal

How does the processor interact with I/O devices?

I/O Device Driver Software Interface

Set of methods to write/read data to/from device and control device
Example: Linux Character Devices

```
// Open a toy " echo " character device
int fd = open("/dev/echo", O_RDWR);

// Write to the device
char write_buf[] = "Hello World!";
write(fd, write_buf, sizeof(write_buf));

// Read from the device
char read_buf [32];
read(fd, read_buf, sizeof(read_buf));

// Close the device
close(fd);

// Verify the result
assert(strcmp(write_buf, read_buf)==0);
```

I/O Device API

Typical I/O Device API

- a set of read-only or read/write registers

Command registers

- writing causes device to do something

Status registers

- reading indicates what device is doing, error codes, …

Data registers

- Write: transfer data to a device
- Read: transfer data from a device

Every device uses this API

I/O Device API

Simple (old) example: AT Keyboard Device

8-bit Status:

PE	TO	AUXB	LOCK	AL2	SYSF	IBS	OBS

8-bit Command:

0xAA = “self test”

0xAE = “enable kbd”

0xED = “set LEDs”

…

1 Input Buffer Stats

1 Outbuf

8-bit Data:

scancode (when reading)

LED state (when writing) or …

Communication Interface

Q: How does ~~program~~ ~~OS~~ code talk to device?

A: special instructions to talk over special busses

Programmed I/O ← Interact with cmd, status, and data device registers directly

- inb $a, 0x64 ← kbd status register
- outb $a, 0x60 ← kbd data register
- Specifies: device, data, direction
- Protection: only allowed in kernel mode

Kernel boundary crossinging is expensive

*x86: $a implicit; also inw, outw, inh, outh, …

Communication Interface

Q: How does ~~program~~ ~~OS~~ code talk to device?

A: Map registers into virtual address space

Memory-mapped I/O ⟵ Faster. Less boundary crossing

- Accesses to certain addresses redirected to I/O devices
- Data goes over the memory bus
- Protection: via bits in pagetable entries
- OS+MMU+devices configure mappings

Memory-Mapped I/O

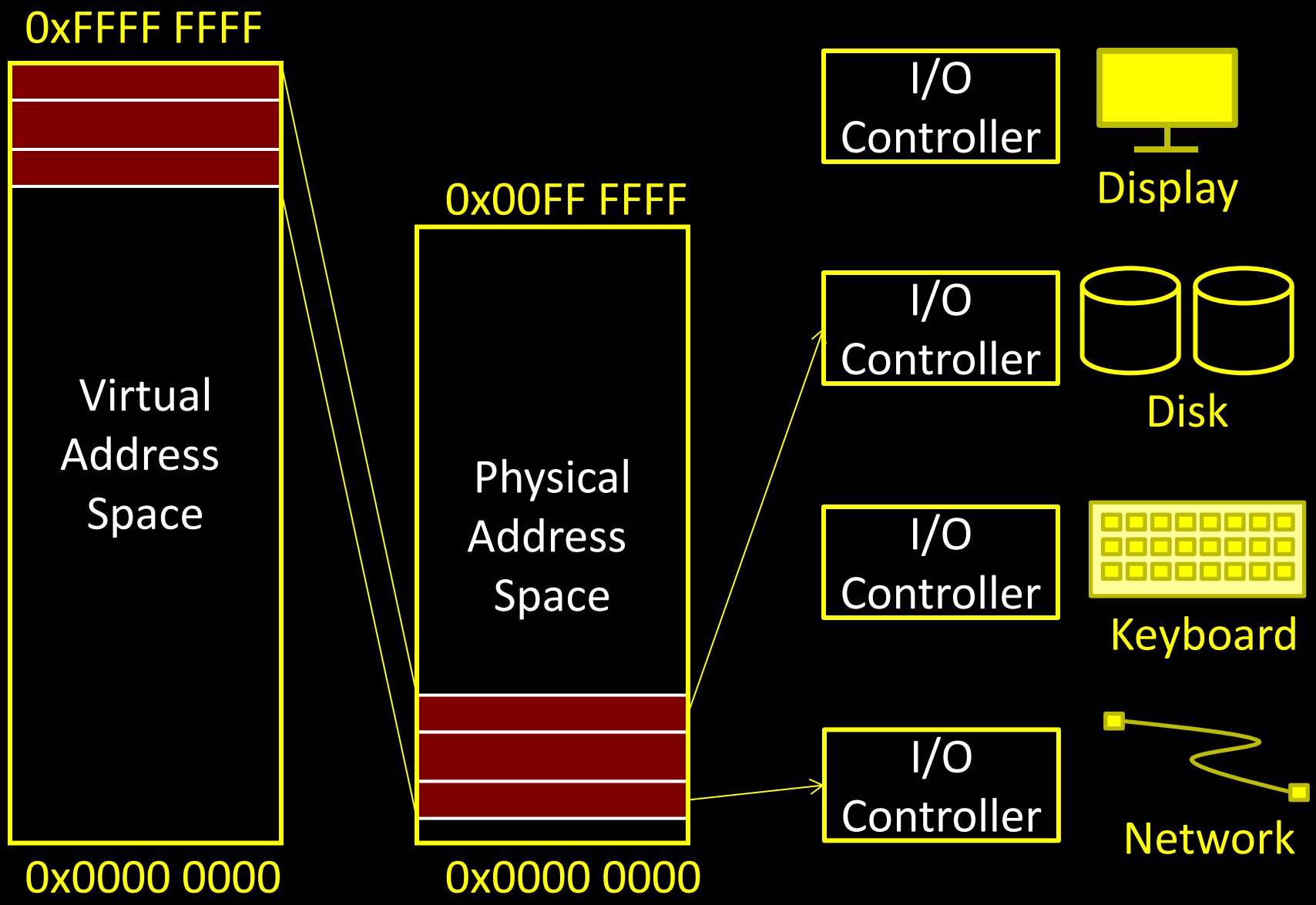

Device Drivers

Programmed I/O

Polling examples,
But mmap I/O more efficient

```
char read_kbd()
{
do {
    sleep();
    status = inb(0x64);
  } while(!(status & 1));

  return inb(0x60);
}
```

syscall

Memory Mapped I/O

```
struct kbd {
  char status, pad[3];
  char data, pad[3];
};
kbd *k = mmap(...);

char read_kbd()
{
  do {
    sleep();
    status = k->status;
  } while(!(status & 1));
  return k->data;
}
```

syscall

NO syscall

Comparing Programmed I/O vs Memory Mapped I/O

Programmed I/O

- Requires special instructions
- Can require dedicated hardware interface to devices
- Protection enforced via kernel mode access to instructions
- Virtualization can be difficult

Memory-Mapped I/O

- Re-uses standard load/store instructions
- Re-uses standard memory hardware interface
- Protection enforced with normal memory protection scheme
- Virtualization enabled with normal memory virtualization scheme

Takeaways

Diverse I/O devices require hierarchical interconnect which is more recently transitioning to point-to-point topologies.

Memory-mapped I/O is an elegant technique to read/write device registers with standard load/stores.

Next Goal

How does the processor know device is ready/done?

Communication Method

Q: How does program learn device is ready/done?

A: Polling: Periodically check I/O status register

- If device ready, do operation
- If device done, …
- If error, take action

```
char read_kbd()
{
do {
    sleep();
    status = inb(0x64);
  } while(!(status & 1));

  return inb(0x60);  }
```

Pro? Con?

- Predictable timing & inexpensive
- But: wastes CPU cycles if nothing to do
- Efficient if there is always work to do (e.g. 10Gbps NIC)

Common in small, cheap, or real-time embedded systems

Sometimes for very active devices too…

Communication Method

Q: How does program learn device is ready/done?

A: Interrupts: Device sends interrupt to CPU

- Cause register identifies the interrupting device
- interrupt handler examines device, decides what to do

Priority interrupts

- Urgent events can interrupt lower-priority interrupt handling
- OS can ~~disable~~ defer interrupts

Pro? Con?

- More efficient: only interrupt when device ready/done
- Less efficient: more expensive since save CPU context
  - CPU context: PC, SP, registers, etc
- Con: unpredictable b/c event arrival depends on other devices' activity

Takeaways

Diverse I/O devices require hierarchical interconnect which is more recently transitioning to point-to-point topologies.

Memory-mapped I/O is an elegant technique to read/write device registers with standard load/stores.

Interrupt-based I/O avoids the wasted work in polling-based I/O and is usually more efficient

Next Goal

How do we transfer a ***lot*** of data ***efficiently***?

I/O Data Transfer

How to talk to device?

- Programmed I/O or Memory-Mapped I/O

How to get events?

- Polling or Interrupts

How to transfer lots of data?

```
disk->cmd = READ_4K_SECTOR;
disk->data = 12;
while (!(disk->status & 1) { }
for (i = 0..4k)
 buf[i] = disk->data;
```

Very Expensive

I/O Data Transfer

Programmed I/O xfer: Device ←→ CPU ←→ RAM

for (i = 1 .. n)

- CPU issues read request
- Device puts data on bus & CPU reads into registers
- CPU writes data to memory
- ***Not*** efficient

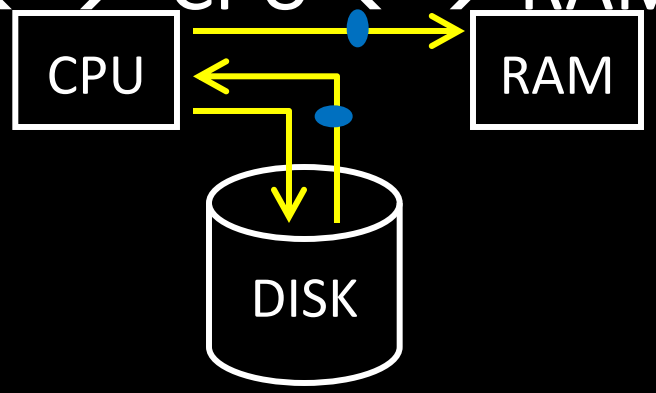

Read from Disk
Write to Memory
Everything interrupts CPU
Wastes CPU

I/O Data Transfer

Q: How to transfer lots of data ***efficiently***?

A: Have device access memory directly

Direct memory access (DMA)

- 1) OS provides starting address, length
- 2) controller (or device) transfers data autonomously
- 3) Interrupt on completion / error

DMA: Direct Memory Access

Programmed I/O xfer: Device ←→ CPU ←→ RAM

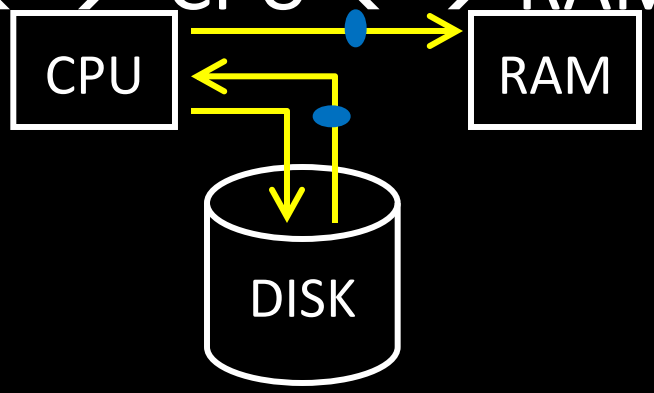

for (i = 1 .. n)

- CPU issues read request
- Device puts data on bus & CPU reads into registers
- CPU writes data to memory

DMA: Direct Memory Access

Programmed I/O xfer: Device ←→ CPU ←→ RAM

for (i = 1 .. n)

- CPU issues read request
- Device puts data on bus & CPU reads into registers
- CPU writes data to memory

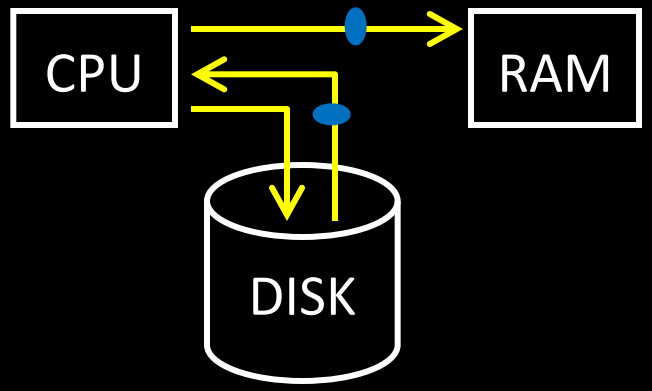

DMA xfer: Device ←→ RAM

- CPU sets up DMA request
- for (i = 1 ... n)
  Device puts data on bus & RAM accepts it
- Device interrupts CPU after done

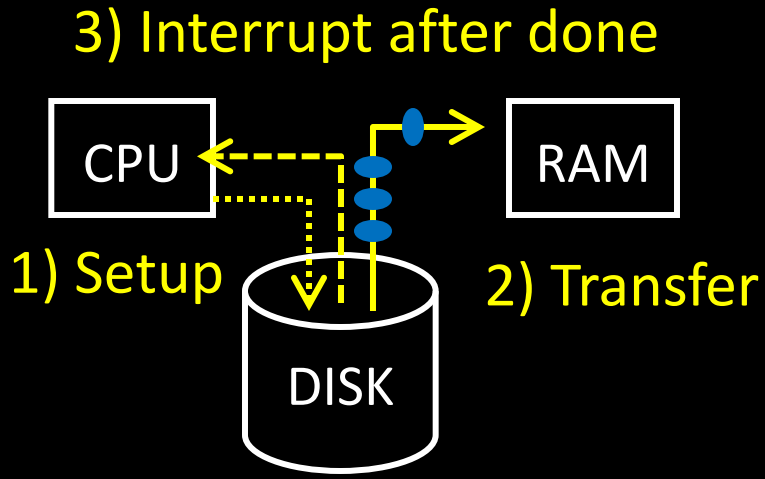

DMA Example

DMA example: reading from audio (mic) input

- DMA engine on audio device… or I/O controller … or …

```
int dma_size = 4*PAGE_SIZE;
int *buf = alloc_dma(dma_size);
...
dev->mic_dma_baseaddr = (int)buf;
dev->mic_dma_count = dma_len;
dev->cmd = DEV_MIC_INPUT |
DEV_INTERRUPT_ENABLE | DEV_DMA_ENABLE;
```

DMA Issues (1): Addressing

Issue #1: DMA meets Virtual Memory

RAM: physical addresses

Programs: virtual addresses

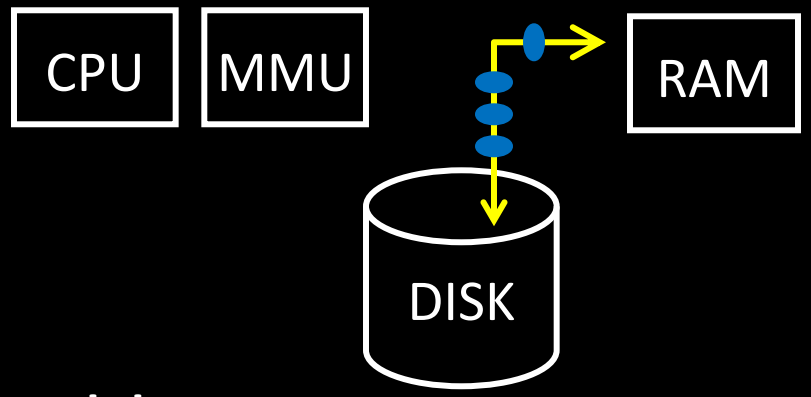

Solution: DMA uses physical addresses

- OS uses physical address when setting up DMA
- OS allocates contiguous physical pages for DMA
- Or: OS splits xfer into page-sized chunks

  (many devices support DMA “chains” for this reason)

DMA Example

DMA example: reading from audio (mic) input

- DMA engine on audio device… or I/O controller … or …

```
int dma_size = 4*PAGE_SIZE;
void *buf = alloc_dma(dma_size);
...
dev->mic_dma_baseaddr = virt_to_phys(buf);
dev->mic_dma_count = dma_len;
dev->cmd = DEV_MIC_INPUT |
DEV_INTERRUPT_ENABLE | DEV_DMA_ENABLE;
```

DMA Issues (1): Addressing

Issue #1: DMA meets Virtual Memory

RAM: physical addresses

Programs: virtual addresses

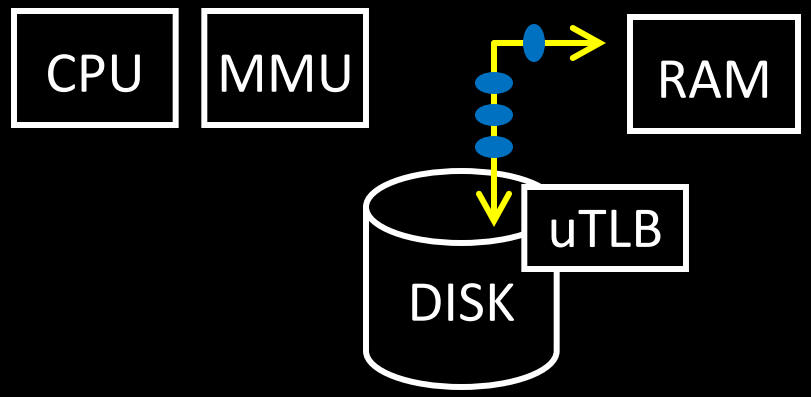

Solution 2: DMA uses virtual addresses

- OS sets up mappings on a mini-TLB

DMA Issues (2): Virtual Mem

Issue #2: DMA meets *Paged* Virtual Memory

DMA destination page may get swapped out

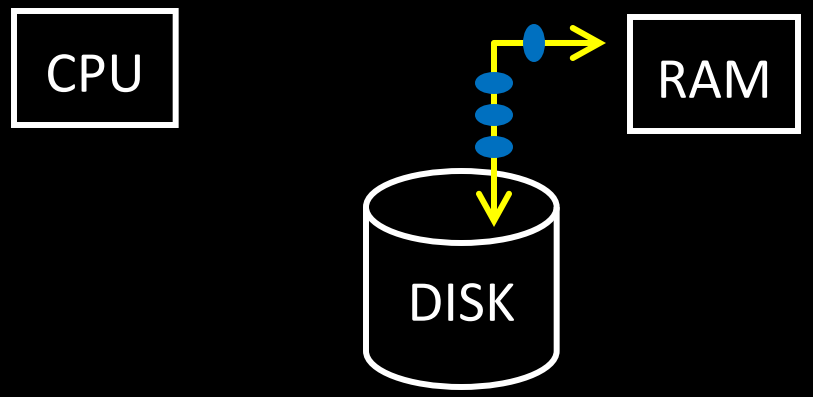

Solution: Pin the page before initiating DMA

Alternate solution: Bounce Buffer

- DMA to a pinned kernel page, then memcpy elsewhere

DMA Issues (4): Caches

Issue #4: DMA meets Caching

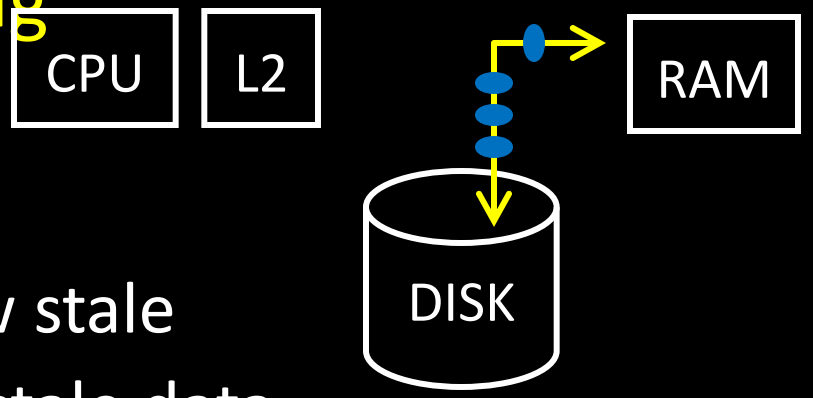

DMA-related data could be cached in L1/L2

- DMA to Mem: cache is now stale
- DMA from Mem: dev gets stale data

Solution: (software enforced coherence)

- OS flushes some/all cache before DMA begins
- Or: don't touch pages during DMA
- Or: mark pages as uncacheable in page table entries
  - (needed for Memory Mapped I/O too!)

DMA Issues (4): Caches

Issue #4: DMA meets Caching

DMA-related data could be cached in L1/L2

- DMA to Mem: cache is now stale
- DMA from Mem: dev gets stale data

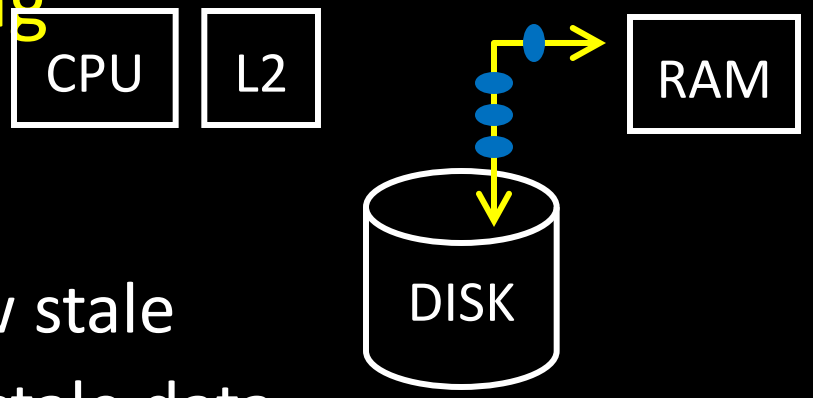

Solution 2: (hardware coherence aka snooping)

- cache listens on bus, and conspires with RAM
- DMA to Mem: invalidate/update data seen on bus
- DMA from mem: cache services request if possible, otherwise RAM services

Takeaways

Diverse I/O devices require hierarchical interconnect which is more recently transitioning to point-to-point topologies.

Memory-mapped I/O is an elegant technique to read/write device registers with standard load/stores.

Interrupt-based I/O avoids the wasted work in polling-based I/O and is usually more efficient.

Modern systems combine memory-mapped I/O, interrupt-based I/O, and direct-memory access to create sophisticated I/O device subsystems.

I/O Summary

How to talk to device?

Programmed I/O or Memory-Mapped I/O

How to get events?

Polling or Interrupts

How to transfer lots of data?

DMA

Administrivia

No Lab section this week

Project3 *extended* to tonight Tuesday, April 23rd

Project3 Cache Race Games night Friday, Apr 26th, 5pm

- **Come, eat, drink, have fun and be merry!**
- **Location: B17 Upson Hall**

Prelim3: ***Thursday***, April 25th in evening

- Time: We will start at ***7:30pm sharp***, so come early
- **Two Locations: PHL101 and UPSB17**
  - **If NetID *begins* with 'a' to 'j', then go to PHL101 (Phillips Hall rm 101)**
  - **If NetID *begins* with 'k' to 'z', then go to UPSB17 (Upson Hall rm B17)**
- Prelim Review: Today, Tue, at 6:00pm in Phillips Hall rm 101

Project4: Final project out next week

- Demos: May 14 and 15
- ***Will not be able to use slip days***

Administrivia

Next two weeks

- Week 13 (Apr 22): Project3 Games Night and Prelim3
- Week 14 (Apr 29): Project4 handout

Final Project for class

- Week 15 (May 6): Project4 design doc due
- Week 16 (May 13): Project4 due by May 15th