Multicore and Parallel Processing

Hakim Weatherspoon

CS 3410, Spring 2013

Computer Science

Cornell University

P & H Chapter 4.10-11, 7.1-6

xkcd/619

IT TOOK A LOT OF WORK, BUT THIS LATEST LINUX PATCH ENABLES SUPPORT FOR MACHINES WITH 4,096 CPUs, UP FROM THE OLD LIMIT OF 1,024.
DO YOU HAVE SUPPORT FOR SMOOTH FULL-SCREEN FLASH VIDEO YET?
NO, BUT WHO USES THAT?

Pitfall: Amdahl's Law

Execution time after improvement =

$$\frac{\text{affected execution time}}{\text{amount of improvement}} + \text{execution time unaffected}$$

$$\boxed{T_{\text{improved}} = \frac{T_{\text{affected}}}{\text{improvement factor}} + T_{\text{unaffected}}}$$

Pitfall: Amdahl's Law

Improving an aspect of a computer and expecting a proportional improvement in overall performance

$$T_{improved} = \frac{T_{affected}}{\text{improvement factor}} + T_{unaffected}$$

Example: multiply accounts for 80s out of 100s

Scaling Example

Workload: sum of 10 scalars, and 10 × 10 matrix sum

- Speed up from 10 to 100 processors?

Single processor: Time = $(10 + 100) \times t_{add}$

10 processors

100 processors

.

Scaling Example

What if matrix size is 100 × 100?

Single processor: Time = $(10 + 10000) \times t_{add}$

10 processors

100 processors

.

Goals for Today

How to improve System Performance?

- Instruction Level Parallelism (ILP)
- Multicore
  - Increase clock frequency vs multicore
- Beware of Amdahls Law

Next time:

- Concurrency, programming, and synchronization

Problem Statement

Q: How to improve system performance?

→ Increase CPU clock rate?

→ But I/O speeds are limited

Disk, Memory, Networks, etc.

Recall: Amdahl's Law

Solution: Parallelism

Instruction-Level Parallelism (ILP)

Pipelining: execute multiple instructions in parallel

Q: How to get more instruction level parallelism?

A: Deeper pipeline

- E.g. 250MHz 1-stage; 500Mhz 2-stage; 1GHz 4-stage; 4GHz 16-stage

Pipeline depth limited by…

- max clock speed (less work per stage $\Rightarrow$ shorter clock cycle)
- min unit of work
- dependencies, hazards / forwarding logic

Instruction-Level Parallelism (ILP)

Pipelining: execute multiple instructions in parallel

Q: How to get more instruction level parallelism?

Static Multiple Issue

Static Multiple Issue

a.k.a. Very Long Instruction Word (VLIW)

Compiler groups instructions to be issued together

- Packages them into “issue slots”

Q: How does HW detect and resolve hazards?

MIPS with Static Dual Issue

Two-issue packets

- One ALU/branch instruction
- One load/store instruction
- 64-bit aligned
  - ALU/branch, then load/store
  - Pad an unused instruction with nop

Address	Instruction type	Pipeline Stages						
n	ALU/branch	IF	ID	EX	MEM	WB		
n + 4	Load/store	IF	ID	EX	MEM	WB		
n + 8	ALU/branch		IF	ID	EX	MEM	WB	
n + 12	Load/store		IF	ID	EX	MEM	WB	
n + 16	ALU/branch			IF	ID	EX	MEM	WB
n + 20	Load/store			IF	ID	EX	MEM	WB

Scheduling Example

Schedule this for dual-issue MIPS

```
Loop: lw   $t0, 0($s1)       # $t0=array element
      addu $t0, $t0, $s2     # add scalar in $s2
      sw   $t0, 0($s1)       # store result
      addi $s1, $s1,–4       # decrement pointer
      bne  $s1, $zero, Loop # branch $s1!=0
```

	ALU/branch	Load/store	cycle

Scheduling Example

Compiler scheduling for dual-issue MIPS…

```
Loop:  lw   $t0, 0($s1)          # $t0 = A[i]
       lw   $t1, 4($s1)          # $t1 = A[i+1]
       addu $t0, $t0, $s2        # add $s2
       addu $t1, $t1, $s2        # add $s2
       sw   $t0, 0($s1)          # store A[i]
       sw   $t1, 4($s1)          # store A[i+1]
       addi $s1, $s1, +8         # increment pointer
       bne  $s1, $s3, TOP        # continue if $s1!=end
```

	ALU/branch slot	Load/store slot	cycle
Loop:	nop	lw $t0, 0($s1)	1
	nop	lw $t1, 4($s1)	2
	addu $t0, $t0, $s2	nop	3
	addu $t1, $t1, $s2	sw $t0, 0($s1)	4
	addi $s1, $s1, +8	sw $t1, 4($s1)	5
	bne $s1, $s3, TOP	nop	6

Scheduling Example

Compiler scheduling for dual-issue MIPS…

```
Loop:  lw   $t0, 0($s1)          # $t0 = A[i]
       lw   $t1, 4($s1)          # $t1 = A[i+1]
       addu $t0, $t0, $s2        # add $s2
       addu $t1, $t1, $s2        # add $s2
       sw   $t0, 0($s1)          # store A[i]
       sw   $t1, 4($s1)          # store A[i+1]
       addi $s1, $s1, +8         # increment pointer
       bne  $s1, $s3, TOP        # continue if $s1!=end
```

	ALU/branch slot	Load/store slot	cycle
Loop:	nop	lw $t0, 0($s1)	1
	addi $s1, $s1, +8	lw $t1, 4($s1)	2
	addu $t0, $t0, $s2	nop	3
	addu $t1, $t1, $s2	sw $t0, -8($s1)	4
	bne $s1, $s3, Loop	sw $t1, -4($s1)	5

Limits of Static Scheduling

Compiler scheduling for dual-issue MIPS…

```
lw   $t0, 0($s1)          # load A
addi $t0, $t0, +1         # increment A
sw   $t0, 0($s1)          # store A
lw   $t0, 0($s2)          # load B
addi $t0, $t0, +1         # increment B
sw   $t0, 0($s2)          # store B
```

ALU/branch slot	Load/store slot	cycle
nop	lw $t0, 0($s1)	1
nop	nop	2
addi $t0, $t0, +1	nop	3
nop	sw $t0, 0($s1)	4
nop	lw $t0, 0($s2)	5
nop	nop	6
addi $t0, $t0, +1	nop	7
nop	sw $t0, 0($s2)	8

Limits of Static Scheduling

Compiler scheduling for dual-issue MIPS…

```
lw   $t0, 0($s1)          # load A
addi $t0, $t0, +1         # increment A
sw   $t0, 0($s1)          # store A
lw   $t1, 0($s2)          # load B
addi $t1, $t1, +1         # increment B
sw   $t0, 0($s2)          # store B
```

ALU/branch slot	Load/store slot	cycle
nop	lw $t0, 0($s1)	1
nop	lw $t1, 0($s2)	2
addi $t0, $t0, +1	nop	3
addi $t1, $t1, +1	sw $t0, 0($s1)	4
nop	sw $t1, 0($s2)	5

Problem: What if $s1 and $s2 are equal (***aliasing***)? Won't work

Dynamic Multiple Issue

Dynamic Multiple Issue

a.k.a. SuperScalar Processor (c.f. Intel)

- CPU examines instruction stream and chooses multiple instructions to issue each cycle
- Compiler can help by reordering instructions….
- … but CPU is responsible for resolving hazards

Even better: Speculation/Out-of-order Execution

- Execute instructions as early as possible
- Aggressive register renaming
- Guess results of branches, loads, etc.
- Roll back if guesses were wrong
- Don’t commit results until all previous insts. are retired

Dynamic Multiple Issue

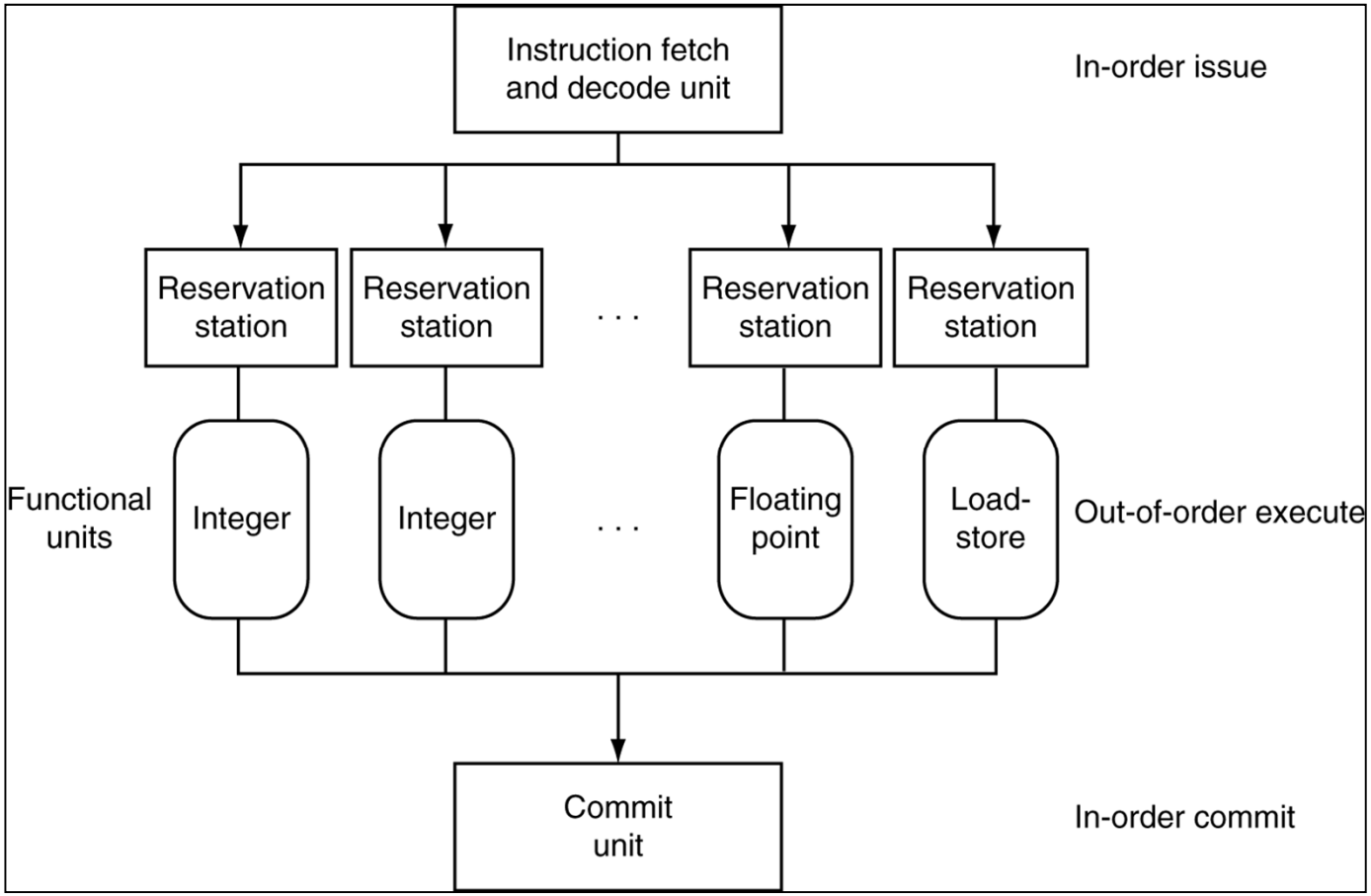

Does Multiple Issue Work?

Q: Does multiple issue / ILP work?

A: Kind of… but not as much as we'd like

Limiting factors?

- Programs dependencies
- Hard to detect dependencies → be conservative
  - e.g. Pointer Aliasing: A[0] += 1; B[0] *= 2;
- Hard to expose parallelism
  - Can only issue a few instructions ahead of PC
- Structural limits
  - Memory delays and limited bandwidth
- Hard to keep pipelines full

Power Efficiency

Q: Does multiple issue / ILP cost much?

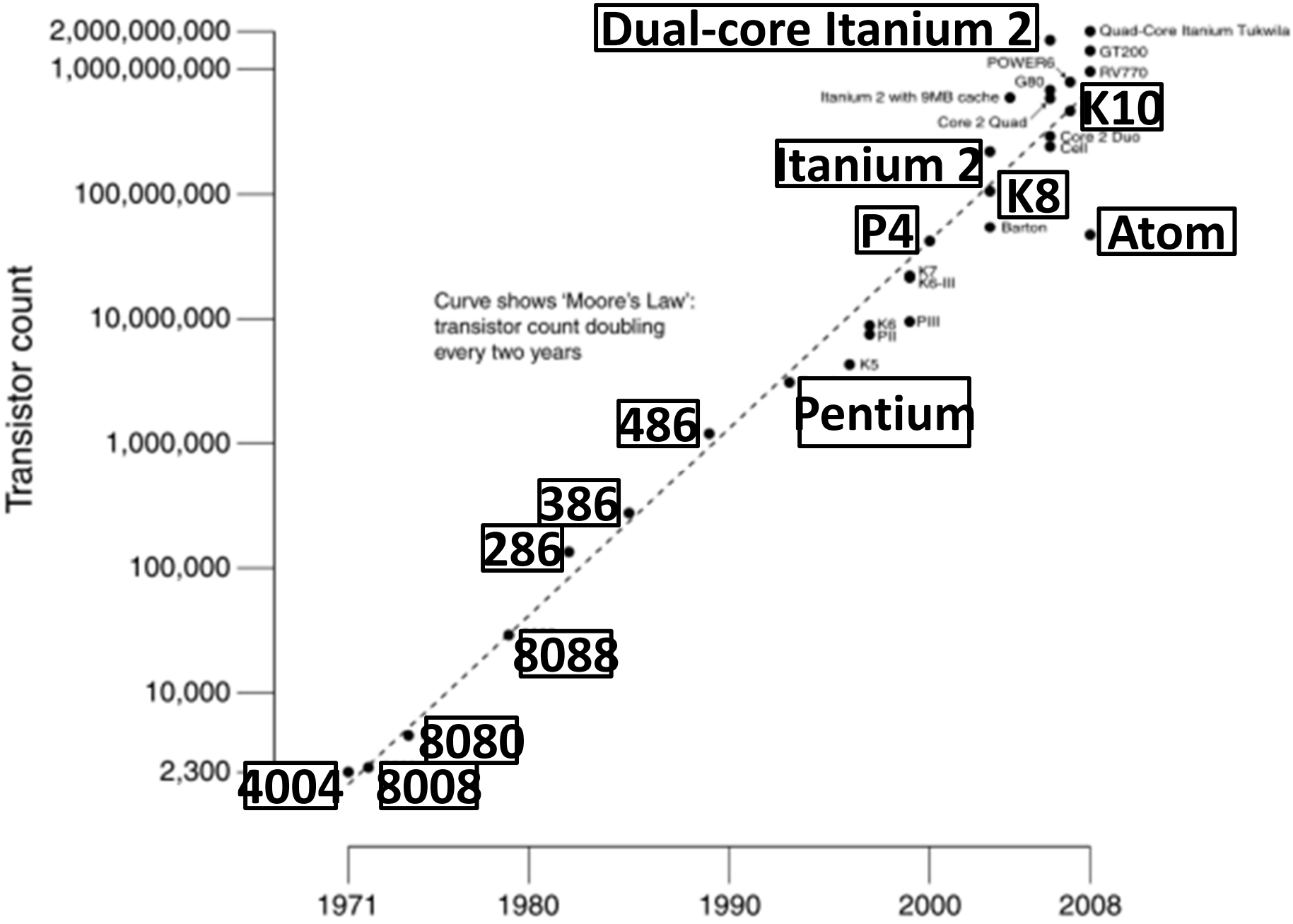
Dual-core Itanium 2
Quad-Core Itanium Tukwila
GT200
RV770
POWER6
G80
Itanium 2 with 9MB cache
K10
Core 2 Quad
Core 2 Duo
Cell
Itanium 2
K8
Barton
P4
Atom
K7
K6-III
Curve shows 'Moore's Law':
transistor count doubling
every two years
K6
PII
PIII
K5
Pentium
486
386
286
8088
8080
4004
8008
2,000,000,000
1,000,000,000
100,000,000
10,000,000
1,000,000
100,000
10,000
2,300
Transistor count
1971
1980
1990
2000
2008

Why Multicore?

Moore's law

- A law about transistors
- Smaller means more transistors per die
- And smaller means faster too

But: Power consumption growing too…

Power Limits

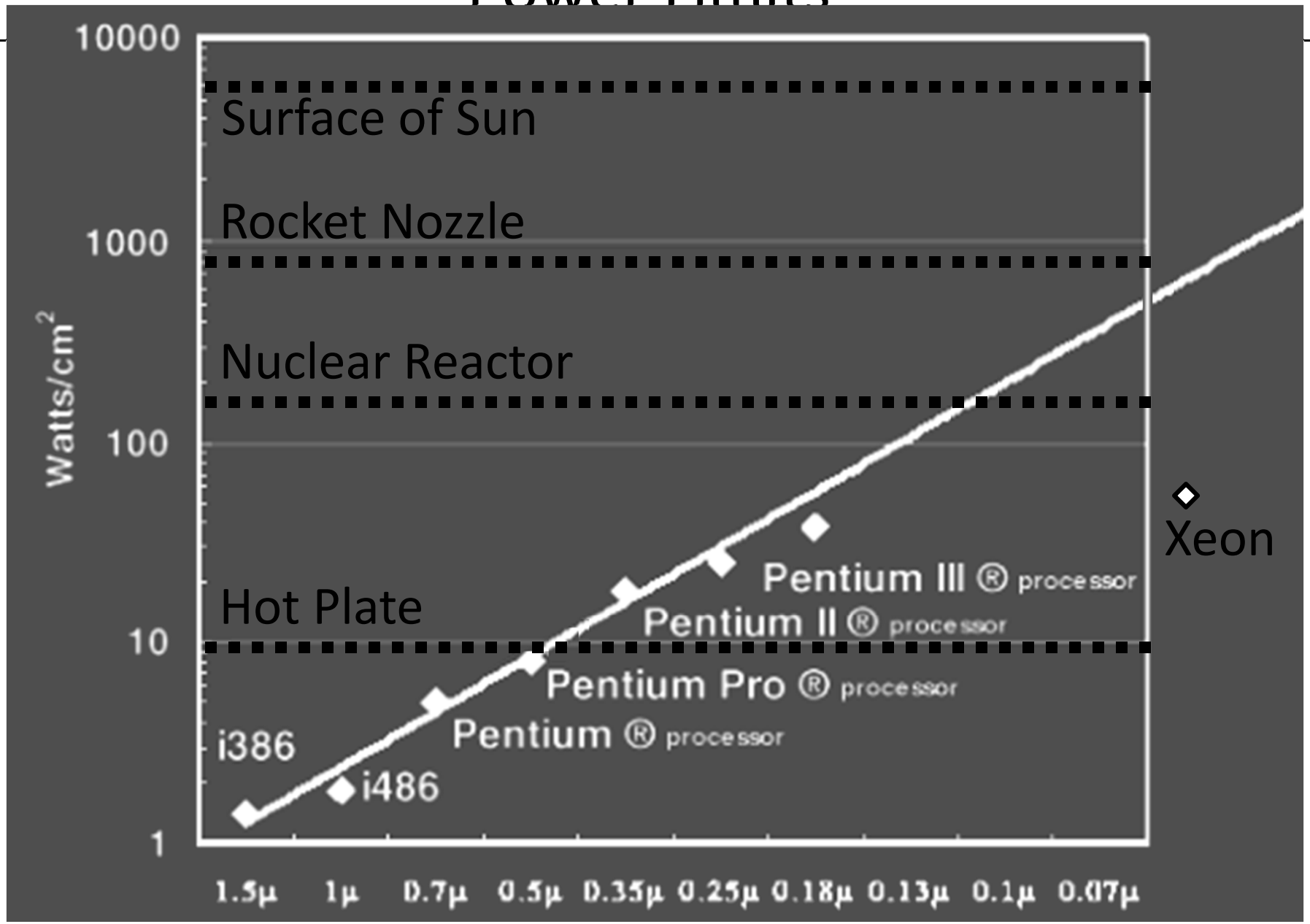

Power Wall

Power = capacitance * voltage^2 * frequency

In practice: Power ~ voltage^3

Reducing voltage helps (a lot)

... so does reducing clock speed

Better cooling helps

The power wall

- We can’t reduce voltage further
- We can’t remove more heat

Why Multicore?

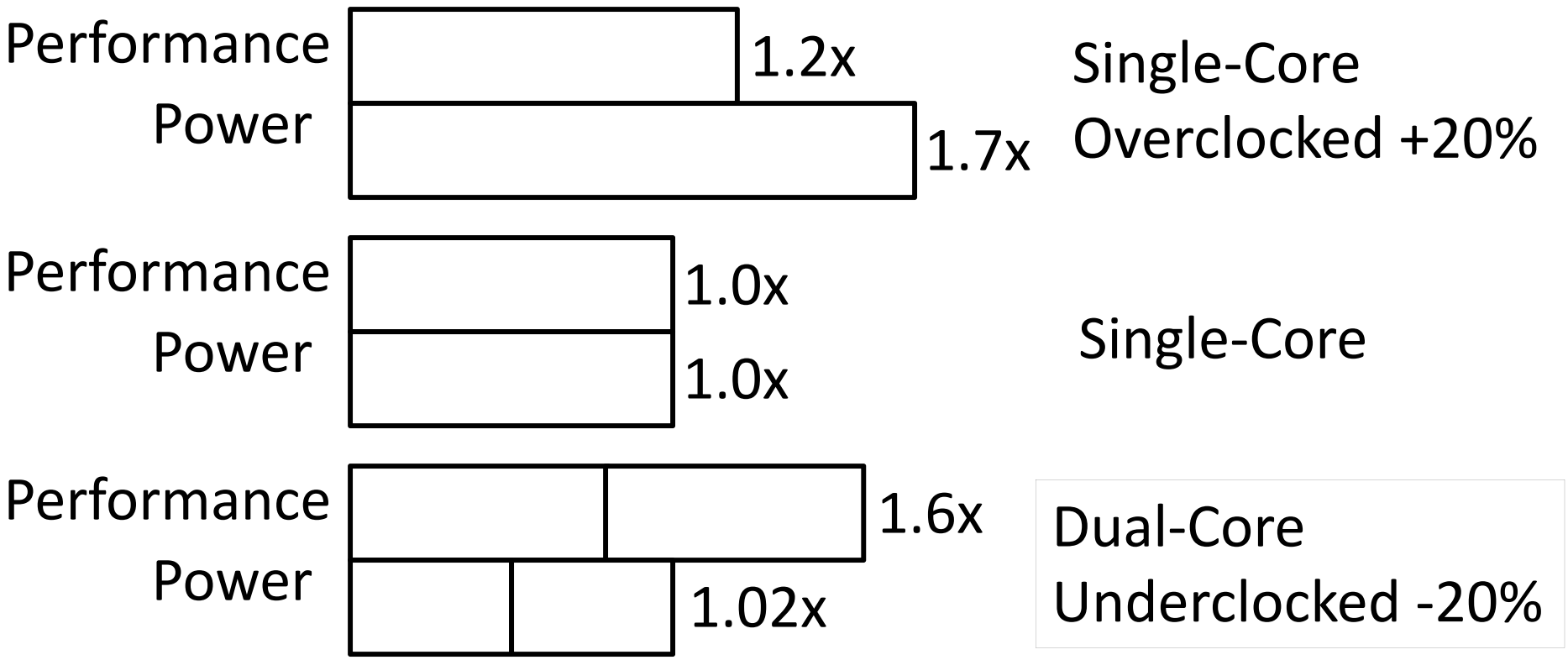

Inside the Processor

AMD Barcelona Quad-Core: 4 processor cores

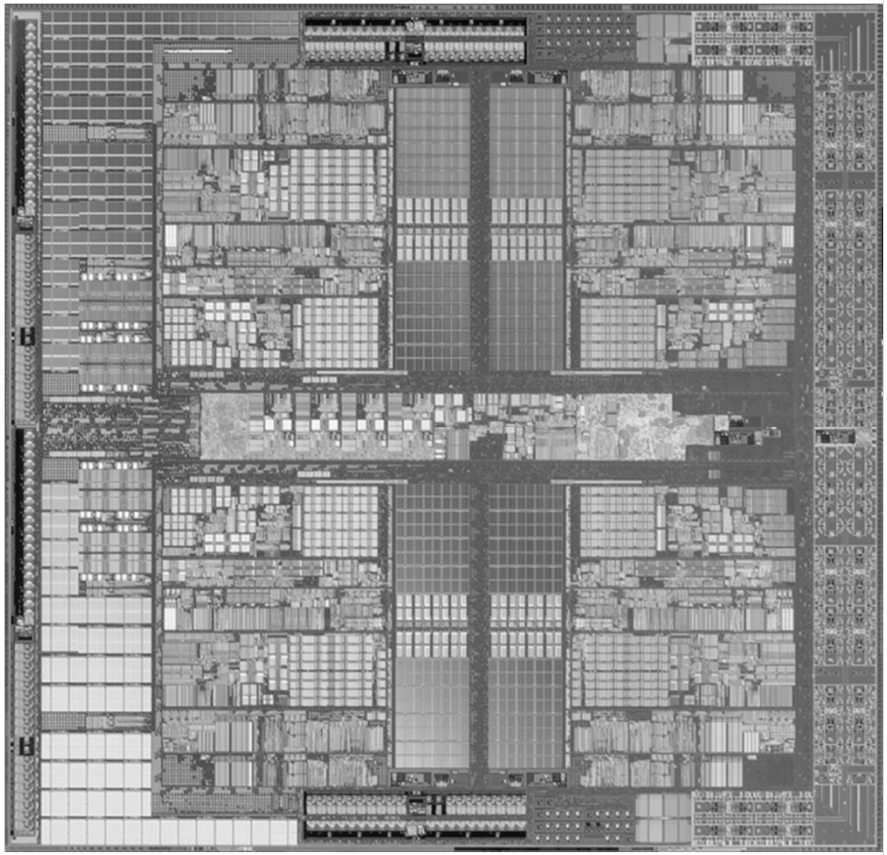

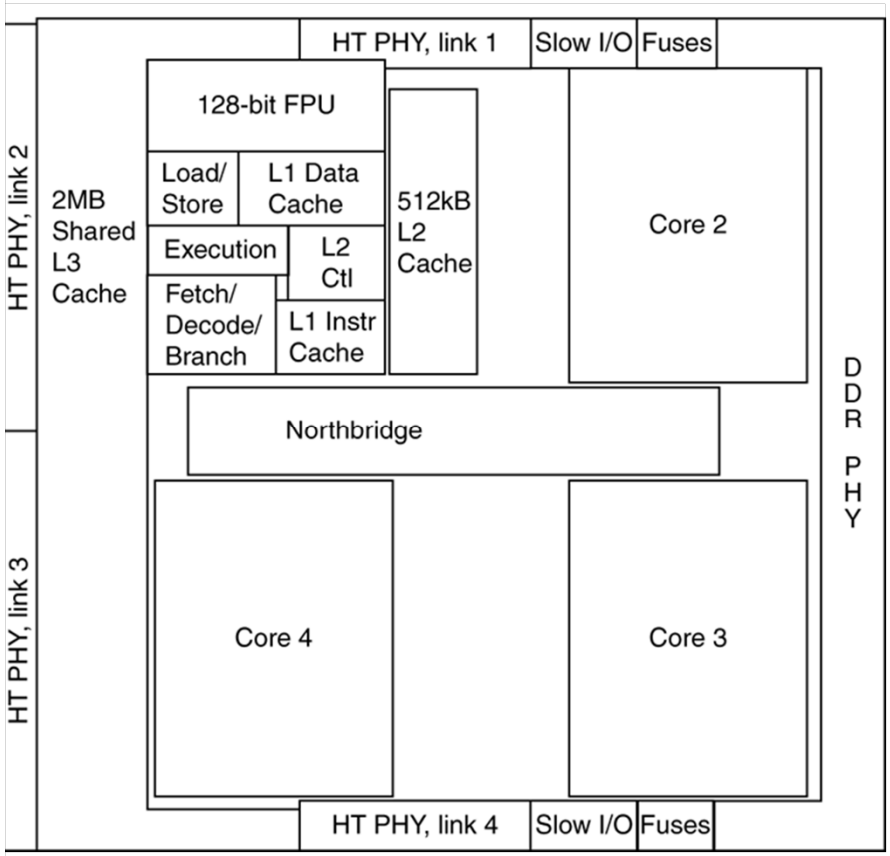

Inside the Processor

Intel Nehalem Hex-Core

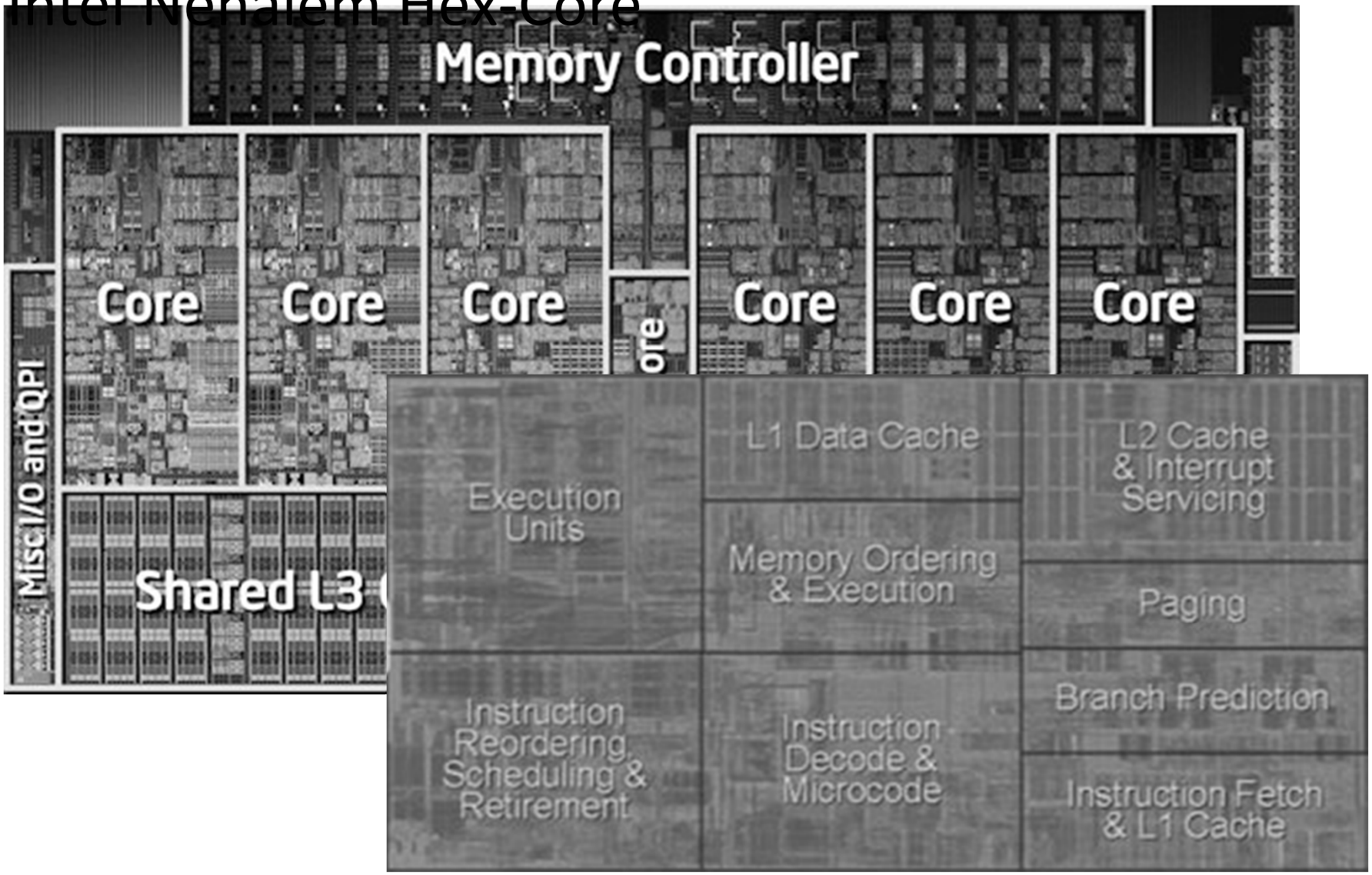

Hyperthreading

Multi-Core vs. Multi-Issue vs. HT

Programs:	*N*	*1*	*N*
Num. Pipelines:	*N*	*1*	1
Pipeline Width:	*1*	*N*	*N*

.

Hyperthreading

Multi-Core vs. Multi-Issue vs. HT

Programs:	*N*	*1*	*N*
Num. Pipelines:	*N*	*1*	1
Pipeline Width:	*1*	*N*	*N*

Hyperthreads

- HT = MultiIssue + extra PCs and registers – dependency logic
- HT = MultiCore – redundant functional units + hazard avoidance

Hyperthreads (Intel)

- Illusion of multiple cores on a single core
- Easy to keep HT pipelines full + share functional units

Example: All of the above

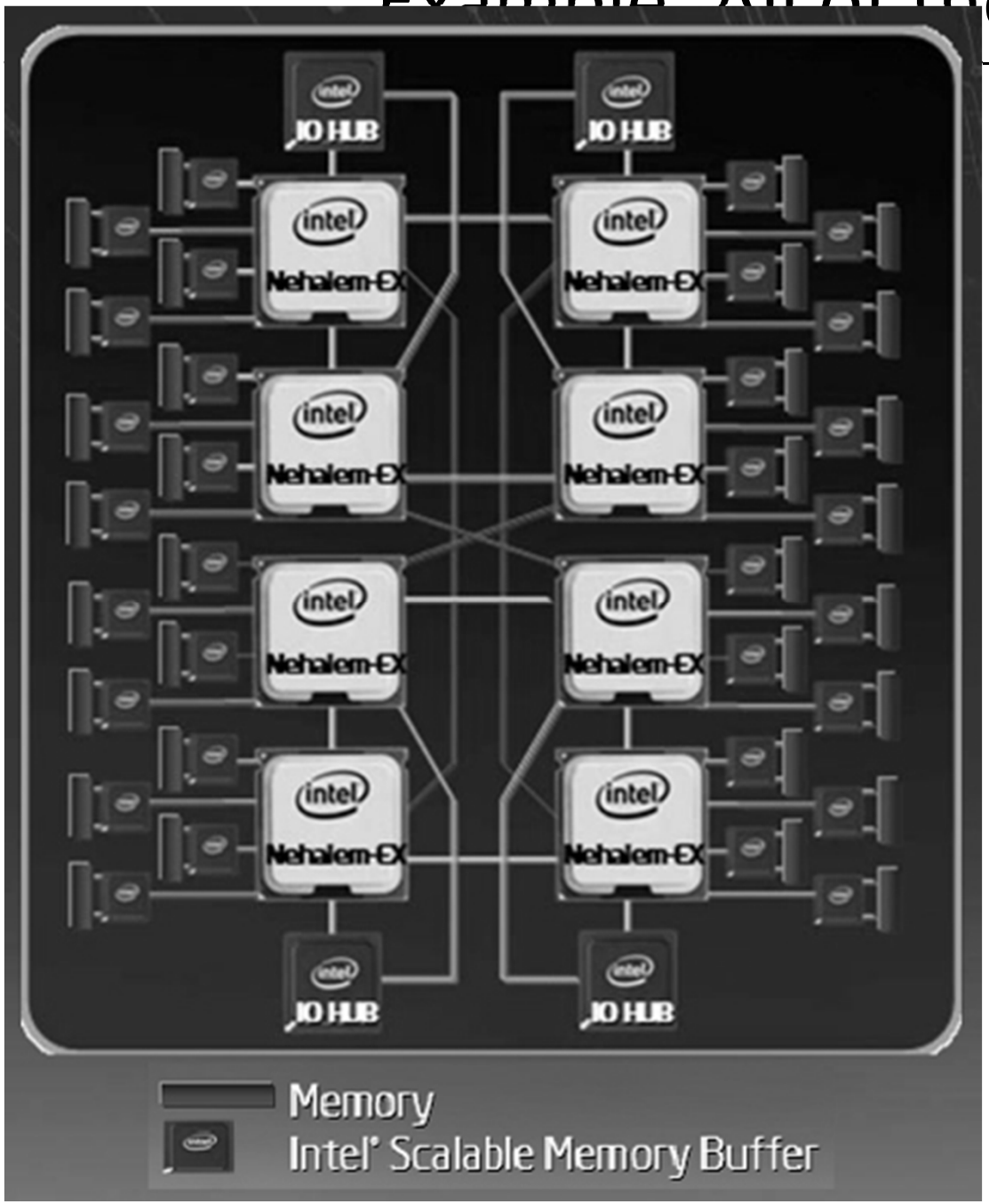

Parallel Programming

Q: So lets just all use multicore from now on!

A: Software must be written as parallel program

Multicore difficulties

- Partitioning work
- Coordination & synchronization
- Communications overhead
- Balancing load over cores
- How do you write parallel programs?
  - ... without knowing exact underlying architecture?

Work Partitioning

Partition work so all cores have something to do

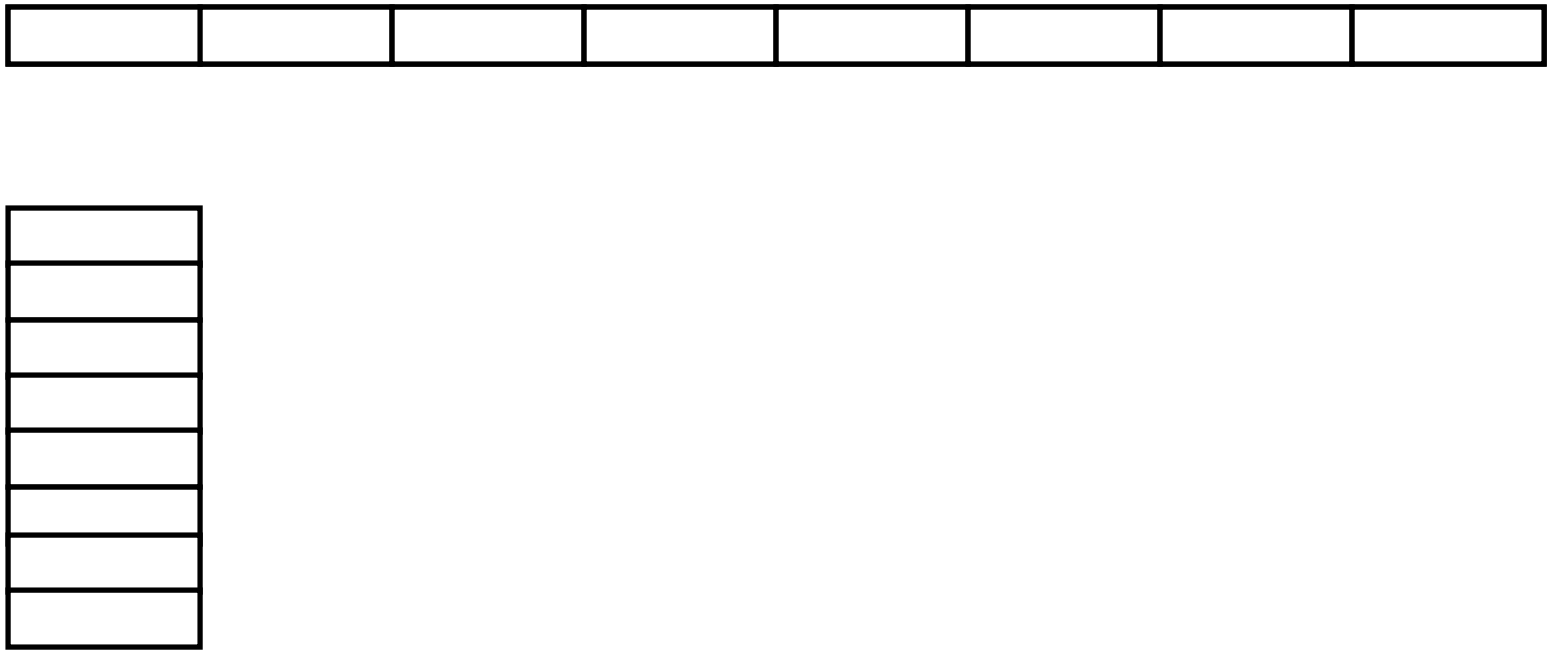

Load Balancing

~~Load Balancing~~

Need to partition so all cores are actually working

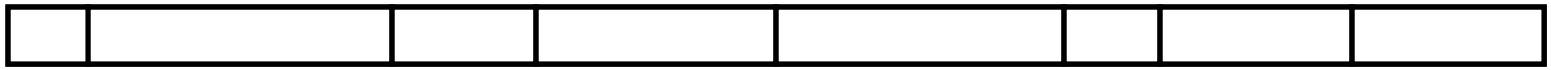

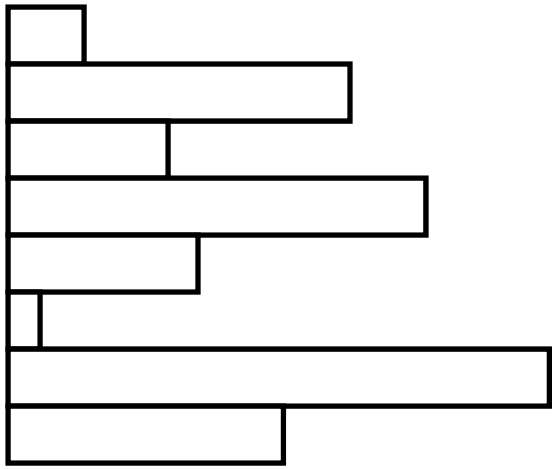

Amdahl's Law

If tasks have a serial part and a parallel part…

Example:

step 1: divide input data into *n* pieces

step 2: do work on each piece

step 3: combine all results

Recall: Amdahl's Law

As number of cores increases …

- time to execute parallel part? goes to zero
- time to execute serial part? Remains the same
- *Serial part eventually dominates*

Amdahl's Law

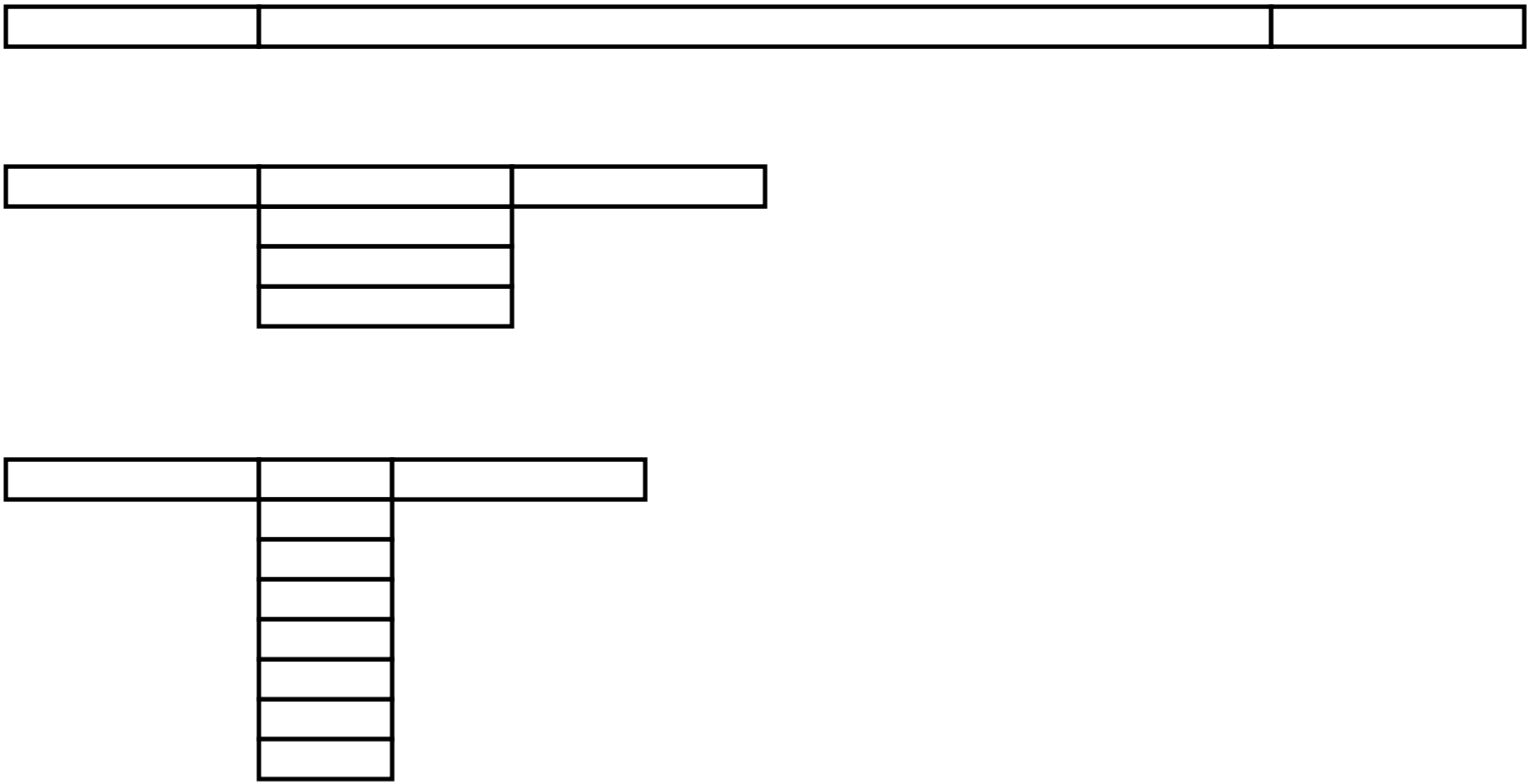

Parallel Programming

Q: So lets just all use multicore from now on!

Multicore difficulties

- Partitioning work
- Coordination & synchronization
- Communications overhead
- Balancing load over cores
- How do you write parallel programs?
  - ... without knowing exact underlying architecture?

Administrivia

Lab3 is *due* ***today***, Thursday, April 11th

Project3 available now, due Monday, April 22nd

- Design Doc *due next week*, Monday, April 15th
- Schedule a Design Doc review Mtg now, by *tomorrow* Friday, April 12th
- *See me after class if looking for new partner*
- **Competition/Games night Friday, April 26th, 5-7pm. Location: B17 Upson**

Homework4 is available now, *due next week*, Wednesday, April 17th

- Work alone
- Question1 on Virtual Memory is pre-lab question for in-class Lab4
- HW Help Session *Thurs (Apr 11)* and *Mon (Apr 15*), 6-7:30pm in B17 Upso

Prelim3 is in *two weeks*, Thursday, April 25th

- Time and Location: 7:30pm in Phillips 101 and Upson B17
- Old prelims are online in CMS

Administrivia

Next four weeks

- Week 11 (Apr 8): Lab3 due and Project3/HW4 handout
- Week 12 (Apr 15): Project3 design doc due and HW4 due
- Week 13 (Apr 22): Project3 due and Prelim3
- Week 14 (Apr 29): Project4 handout

Final Project for class

- Week 15 (May 6): Project4 design doc due
- Week 16 (May 13): Project4 due