Lecture 8

Loops

Announcements for Today

Assignment 1

- We are still grading it
  - Will finish asap
- If you are **close**…
  - Will get feedback in CMS
  - Fix your assignment
- If you are very **wrong**…
  - You got an e-mail
  - Set up tutoring session

Assignment 2

- Posted
- We need one more lecture
  - Due March 20
  - Do not start until A1 done

Reading

- Read Chapters 8, 10
- Focus on sections we skipped

Example: Summing the Elements of a List

```
def sum(thelist):
    """Returns: the sum of all elements in thelist
    Precondition: thelist is a list of all numbers
    (either floats or ints)"""
    pass # Stub to be implemented
```

Remember our approach:
Outline first; then implement

Example: Summing the Elements of a List

```
def sum(thelist):
    """Returns: the sum of all elements in thelist
    Precondition: thelist is a list of all numbers
    (either floats or ints)"""
    # Create a variable to hold result (start at 0)
    # Add each list element to variable
    # Return the variable
```

Example: Summing the Elements of a List

```
def sum(thelist):
    """Returns: the sum of all elements in thelist
    Precondition: thelist is a list of all numbers
    (either floats or ints)"""
    result = 0
    result = result + thelist[0]
    result = result + thelist[1]
    …
    return result
```

There is a problem here

Working with Sequences

- Sequences are potentially **unbounded**
  - Number of elements inside them is not fixed
  - Functions must handle sequences of different lengths
  - **Example**: sum([1,2,3]) vs. sum([4,5,6,7,8,9,10])
- Cannot process with **fixed** number of lines
  - Each line of code can handle at most one element
  - What if # of elements > # of lines of code?
- We need a new **control structure**

For Loops: Processing Sequences

```
# Print contents of seq
x = seq[0]
print x
x = seq[1]
print x
…
x = seq[len(seq)-1]
print x
```

- **Remember**:
  - We cannot program …

The for-loop:

```
for x in seq:
    print x
```

- Key Concepts
  - **loop sequence:** seq
  - **loop variable**: x
  - **body**: print x
  - Also called **repetend**

For Loops: Processing Sequences

The for-loop:

```
for x in seq:
    print x
```

- **loop sequence:** seq
- **loop variable**: x
- **body**: print x

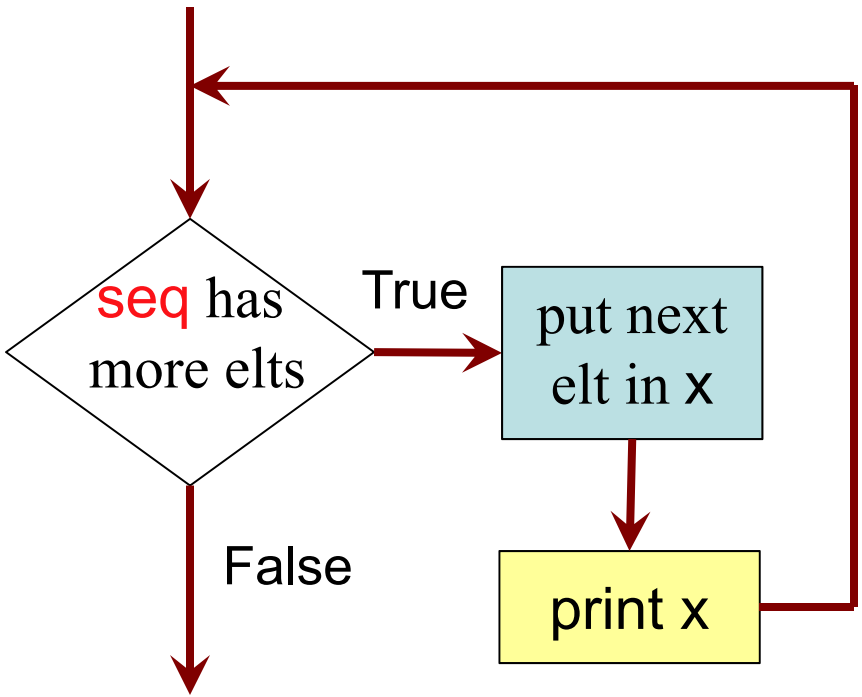

To execute the for-loop:

1. Check if there is a "next" element of **loop sequence**
2. If not, terminate execution
3. Otherwise, put the element in the **loop variable**
4. Execute all of **the body**
5. Repeat as long as 1 is true

Example: Summing the Elements of a List

```
def sum(thelist):
    """Returns: the sum of all elements in thelist
    Precondition: thelist is a list of all numbers
    (either floats or ints)"""
    # Create a variable to hold result (start at 0)
    # Add each list element to variable
    # Return the variable
```

Example: Summing the Elements of a List

```
def sum(thelist):
    """Returns: the sum of all elements in thelist
    Precondition: thelist is a list of all numbers
    (either floats or ints)"""
    result = 0

    for x in thelist:
        result = result + x

    return result
```

- **loop sequence:** thelist
- **loop variable**: x
- **body**: result=result+x

Example: Summing the Elements of a List

```
def sum(thelist):
    """Returns: the sum of all elements in thelist
    Precondition: thelist is a list of all numbers
    (either floats or ints)"""
    result = 0

    for x in thelist:
        result = result + x

    return result
```

Accumulator variable

loop sequence: thelist

- **loop variable**: x
- **body**: result=result+x

For Loops and Conditionals

```
def num_ints(thelist):
    """Returns: the number of ints in thelist
    Precondition: thelist is a list of any mix of types"""
    # Create a variable to hold result (start at 0)
    # for each element in the list…
        # check if it is an int
        # add 1 if it is
    # Return the variable
```

For Loops and Conditionals

```
def num_ints(thelist):
    """Returns: the number of ints in thelist
    Precondition: thelist is a list of any mix of types"""
    result = 0
    for x in thelist:
        if type(x) == int:
            result = result+1
    return result
```

Body

Modifying the Contents of a List

```
def add_one(thelist):
    """(Procedure) Adds 1 to every element in the list
    Precondition: thelist is a list of all numbers
    (either floats or ints)"""
    for x in thelist:
        x = x+1
    # procedure; no return
```

DOES NOT WORK!

For Loops and Frames

```
def add_one(thelist):
    """Adds 1 to every elt
    Pre: thelist is all numb."""
1   for x in thelist:
2       x = x+1
```

add_one(seq):

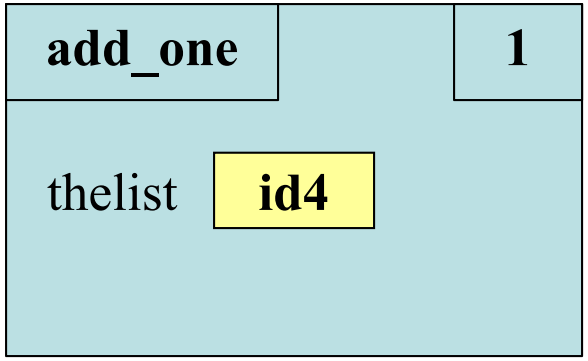

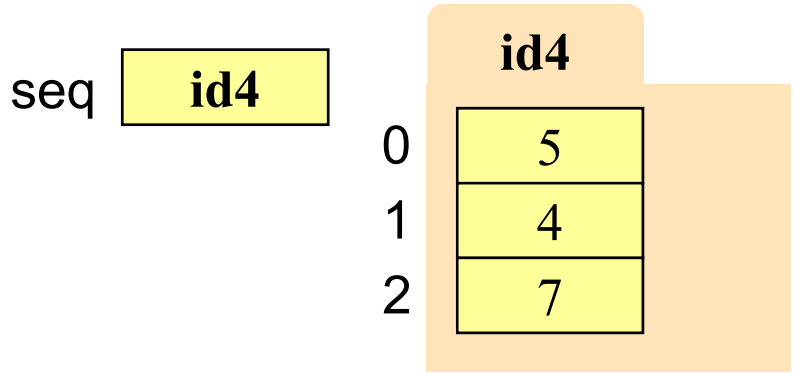

For Loops and Call Frames

```
def add_one(thelist):
    """Adds 1 to every elt
    Pre: thelist is all numb."""
1   for x in thelist:
2       x = x+1
```

add_one(seq):

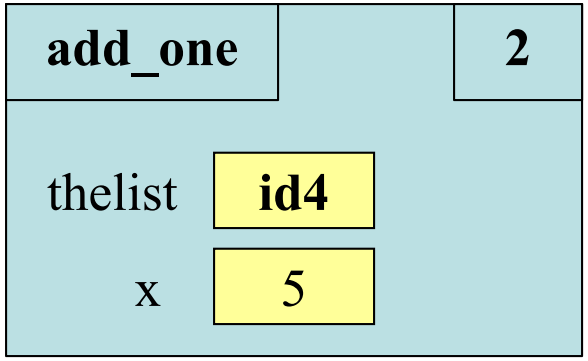

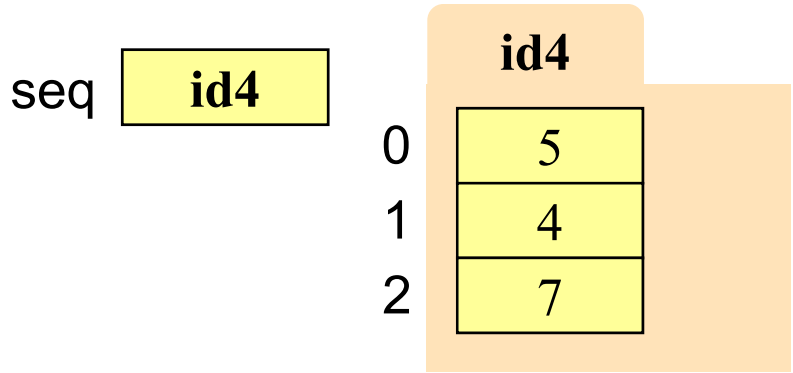

For Loops and Call Frames

```
def add_one(thelist):
    """Adds 1 to every elt
    Pre: thelist is all numb."""
1   for x in thelist:
2       x = x+1
```

add_one(seq):

Loop **back** to line 1

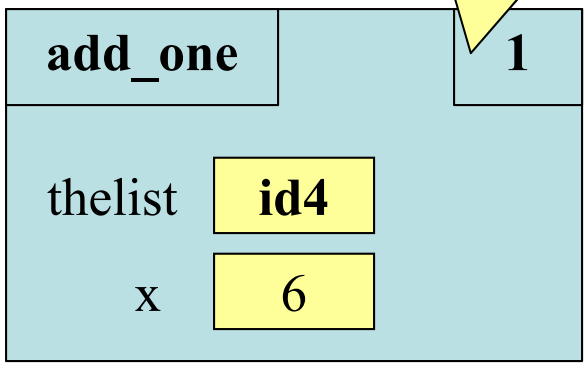

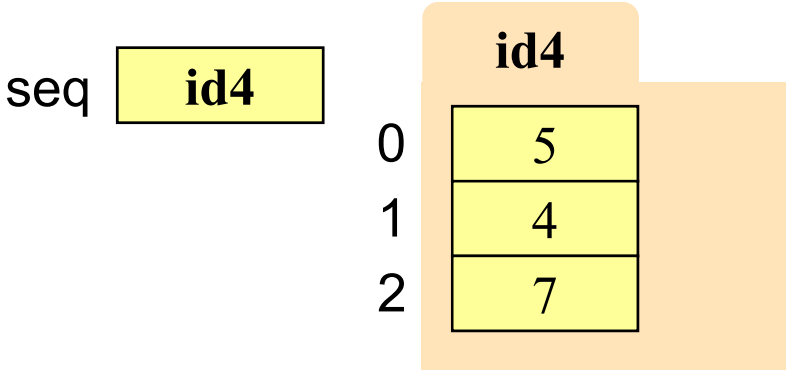

Increments x in **frame**

Does not affect folder

For Loops and Call Frames

```
def add_one(thelist):
    """Adds 1 to every elt
    Pre: thelist is all numb."""
1   for x in thelist:
2       x = x+1
```

add_one(seq):

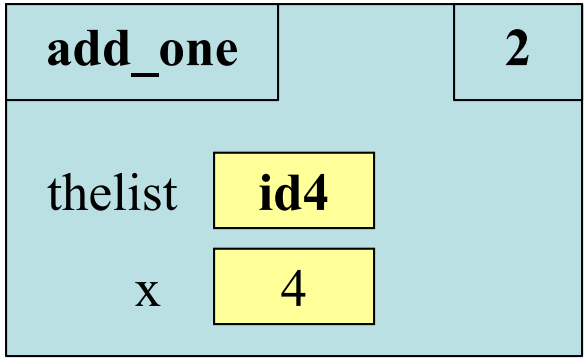

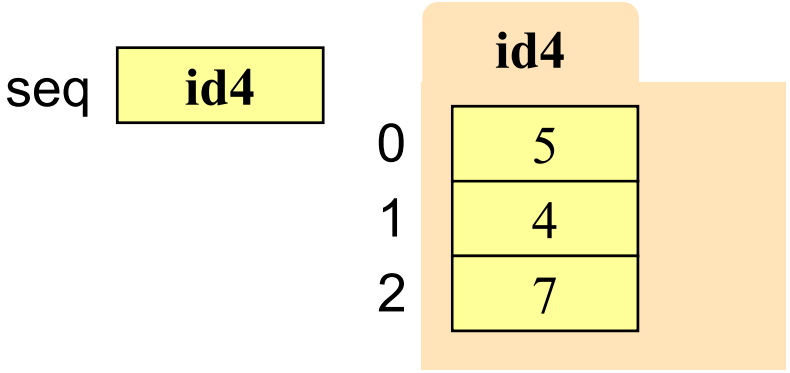

Next element stored in x.
Previous calculation lost.

For Loops and Call Frames

```
def add_one(thelist):
    """Adds 1 to every elt
    Pre: thelist is all numb."""
1   for x in thelist:
2       x = x+1
```

add_one(seq):

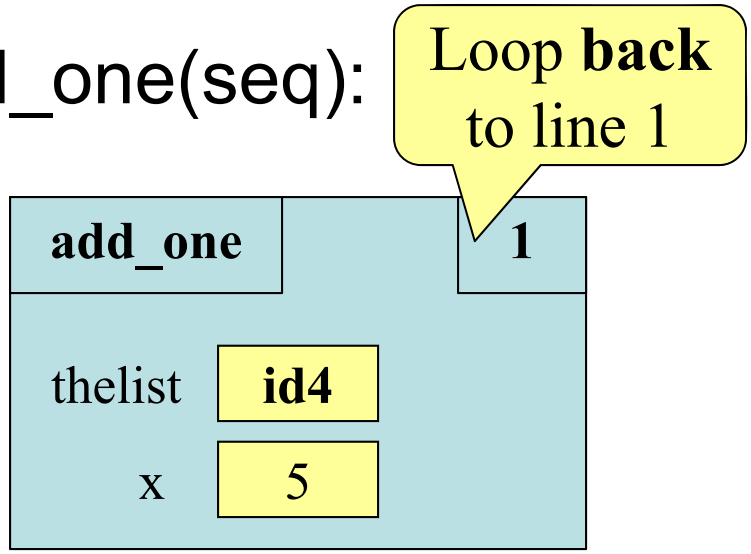

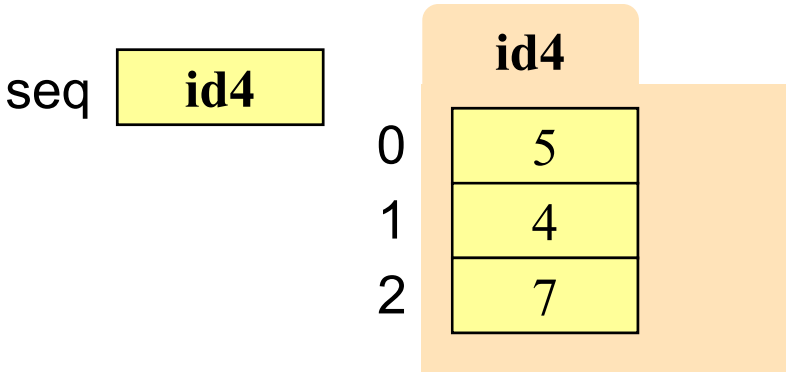

For Loops and Call Frames

```
def add_one(thelist):
    """Adds 1 to every elt
    Pre: thelist is all numb."""
1   for x in thelist:
2       x = x+1
```

add_one(seq):

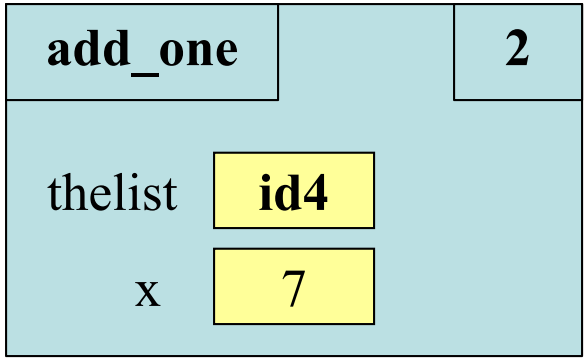

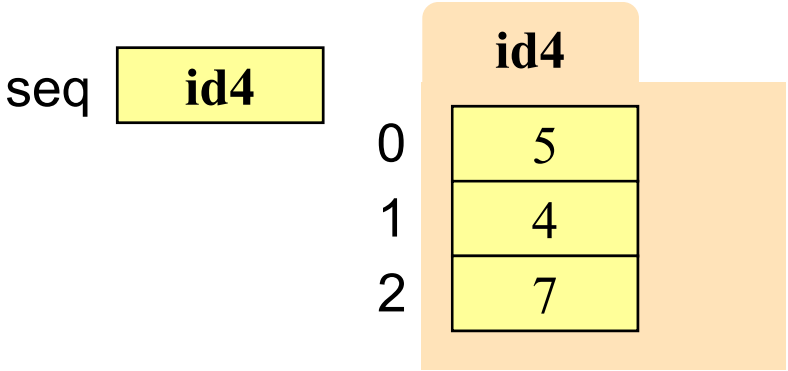

Next element stored in x.
Previous calculation lost.

For Loops and Call Frames

```
def add_one(thelist):
    """Adds 1 to every elt
    Pre: thelist is all numb."""
1   for x in thelist:
2       x = x+1
```

add_one(seq):

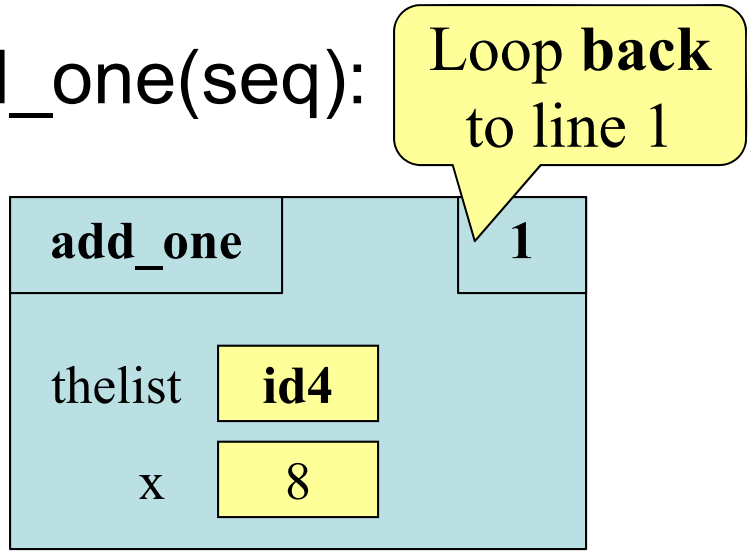

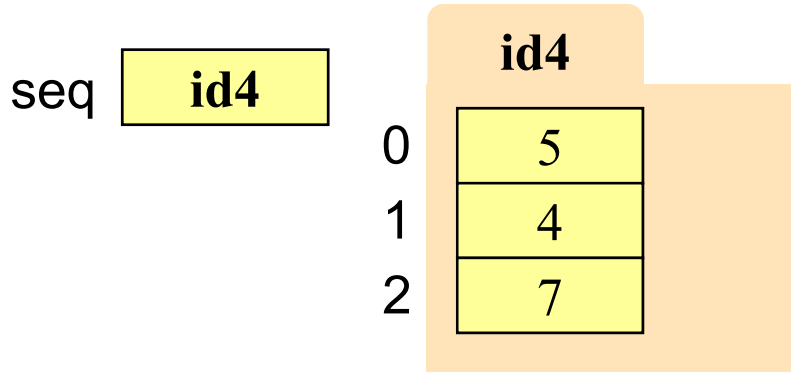

For Loops and Call Frames

```
def add_one(thelist):
    """Adds 1 to every elt
    Pre: thelist is all numb."""
1   for x in thelist:
2       x = x+1
```

add_one(seq):

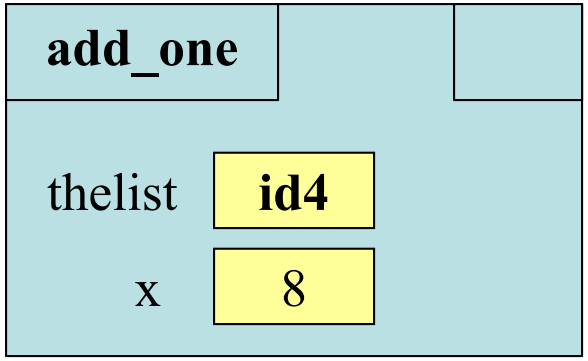

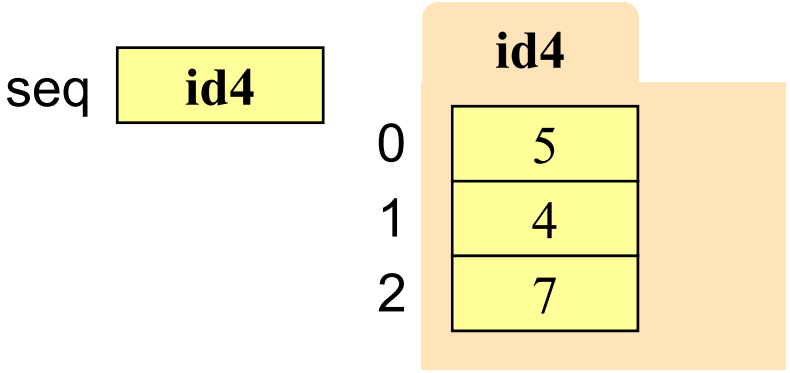

Loop is **completed.**
Nothing new put in x.

For Loops and Call Frames

```
def add_one(thelist):
    """Adds 1 to every elt
    Pre: thelist is all numb."""
1   for x in thelist:
2       x = x+1
```

add_one(seq):

ERASE WHOLE FRAME

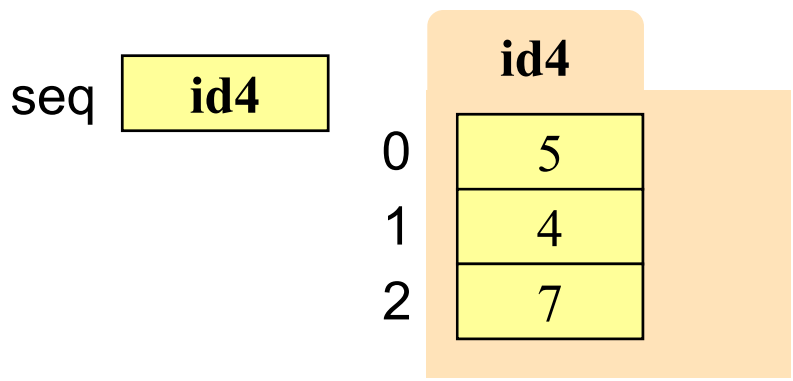

No changes to folder

On The Other Hand

```
def copy_add_one(thelist):
    """Returns: copy with 1 added to every element
    Precondition: thelist is a list of all numbers
    (either floats or ints)"""
    mycopy = []  # accumulator
    for x in thelist:
        x = x+1
        mycopy.append(x)  # add to end of accumulator
    return mycopy
```

Accumulator keeps result from being lost

For Loops: Processing Ranges of Integers

```
total = 0

# add the squares of ints
# in range 2..200 to total
total = total + 2*2
total = total + 3*3
…
total = total + 200*200
```

- For each x in the range 2..200, add x*x to total

The for-loop:

```
for x in range(2,201):
    total = total + x*x
```

- **The range function:**
  - range(x): List of ints 0 to x-1
  - range(a,b): List of ints a to b-1

Modifying the Contents of a List

```
def add_one(thelist):
    """(Procedure) Adds 1 to every element in the list
    Precondition: thelist is a list of all numbers
    (either floats or ints)"""
    size = len(thelist)
    for k in range(size):
        thelist[k] = thelist[k]+1
    # procedure; no return
```

WORKS!

Important Concept in CS: Doing Things Repeatedly

1. Process each item in a sequence
   - Compute aggregate statistics for a dataset, such as the mean, median, standard deviation, etc.
   - Send everyone in a Facebook group an appointment time
2. Perform *n* trials or get *n* samples.
   - Draw a triangle six times to make a hexagon
   - Run a protein-folding simulation for 10^6 time steps
3. Do something an unknown number of times
   - CUAUV team, vehicle keeps moving until reached its goal

Important Concept in CS: Doing Things Repeatedly

1. Process each item in a sequence
   - Compute aggregate statistics for a
     such as the mean, median, stand
   - Send everyone in a Facebook group an appointment time

```
for x in sequence:
    process x
```

2. Perform *n* trials or get *n* samples.
   - Draw a triangle six times to make
   - Run a protein-folding simulation

```
for x in range(n):
    do next thing
```

3. Do something an unknown number of times
   - CUAUV team, vehicle keeps moving until reached its goal

Cannot do this yet
Impossible w/ Python for

Beyond Sequences: The while-loop

while <*condition*>:

statement 1

…

statement n

repetend or **body**

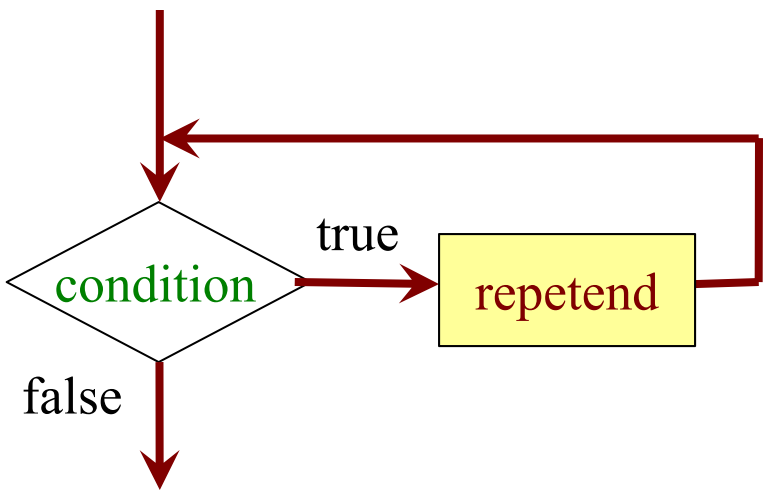

- Relationship to for-loop
  - Broader notion of "still stuff to do"
  - Must explicitly ensure condition becomes false
  - *You* explicitly manage what changes per iteration

While-Loops and Flow

```
print 'Before while'
count = 0
i = 0
while i < 3:
    print 'Start loop '+str(i)
    count = count + i
    i = i + 1
    print 'End loop '
print 'After while'
```

Output:

```
Before while
Start loop 0
End loop
Start loop 1
End loop
Start loop 2
End loop
After while
```

while Versus for

```
# process range b..c-1
for k in range(b,c)
    process k
```

```
# process range b..c-1
k = b
while k < c:
    process k
    k = k+1
```

Must remember to increment

```
# process range b..c
for k in range(b,c+1)
    process k
```

```
# process range b..c
k = b
while k <= c:
    process k
    k = k+1
```

Cases to Use while

Great for when you must **modify** the loop variable

```
# Remove all 3's from list t
i = 0
while i < len(t):
    # no 3's in t[0..i–1]
    if t[i] == 3:
        del t[i]
    else:
        i = i+1
```

```
# Remove all 3's from list t
while 3 in t:
    t.remove(3)
```

Cases to Use while

Great for when you must **modify** the loop variable

```
# Remove all 3's from list t
i = 0
while i < len(t):
    # no 3's in t[0..i–1]
    if t[i] == 3:
        del t[i]
    else:
        i += 1
```

Stopping point keeps changing.

```
# Remove all 3's from list t
while 3 in t:
    t.remove(3)
```

The stopping condition is not a numerical counter this time. Simplifies code a lot.

Cases to Use while

- Want square root of c
  - Make poly $f(x) = x^2 - c$
  - Want root of the poly (x such that $f(x)$ is 0)
- Use **Newton's Method**
  - x_0 = GUESS ($c/2$??)
  - $x_{n+1} = x_n - f(x_n)/f'(x_n)$
    $= x_n - (x_n x_n - c)/(2x_n)$
    $= x_n - x_n/2 + c/2x_n$
    $= x_n/2 + c/2x_n$
  - Stop when x_n good enough

```
def sqrt(c):
    """Return: square root of c
    Uses Newton's method
    Pre: c >= 0 (int or float)"""
    x = c/2
    # Check for convergence
    while abs(x*x – c) > 1e-6:
        # Get x_{n+1} from x_n
        x = x / 2 + c / (2*x)

    return x
```