Lecture 8

Loops

Announcements for Today

Assignment 1

- We are still grading it
  - Will finish Sat at noon
- If you are **close**…
  - Will get feedback in CMS
  - Fix your assignment
- If you are very **wrong**…
  - You got an e-mail
  - Set up tutoring session
- **FINISH THE SURVEY**

Assignment 2

- Posted next **Friday**
  - We need one more lecture
  - Due after Fall Break
  - Do not start until A1 done

Reading

- Read Chapters 8, 10
- Focus on sections we skipped

Example: Summing the Elements of a List

```
def sum(thelist):
    """Returns: the sum of all elements in thelist
    Precondition: thelist is a list of all numbers
    (either floats or ints)"""
    pass # Stub to be implemented
```

Remember our approach:
Outline first; then implement

Example: Summing the Elements of a List

```
def sum(thelist):
    """Returns: the sum of all elements in thelist
    Precondition: thelist is a list of all numbers
    (either floats or ints)"""
    # Create a variable to hold result (start at 0)
    # Add each list element to variable
    # Return the variable
```

Example: Summing the Elements of a List

```
def sum(thelist):
    """Returns: the sum of all elements in thelist
    Precondition: thelist is a list of all numbers
    (either floats or ints)"""
    result = 0
    result = result + thelist[0]
    result = result + thelist[1]
    ...
    return result
```

There is a problem here

Working with Sequences

- Sequences are potentially **unbounded**
  - Number of elements inside them is not fixed
  - Functions must handle sequences of different lengths
  - **Example**: sum([1,2,3]) vs. sum([4,5,6,7,8,9,10])
- Cannot process with **fixed** number of lines
  - Each line of code can handle at most one element
  - What if # of elements > # of lines of code?
- We need a new **control structure**

For Loops: Processing Sequences

```
# Print contents of seq
x = seq[0]
print(x)
x = seq[1]
print(x)
...
x = seq[len(seq)-1]
print(x)
```

- **Remember**:
  - Cannot program …

The for-loop:

```
for x in seq:
    print(x)
```

- Key Concepts
  - **loop sequence:** seq
  - **loop variable**: x
  - **body**: print(x)
  - Also called **repetend**

For Loops: Processing Sequences

The for-loop:

```
for x in seq:
    print(x)
```

- **loop sequence:** seq
- **loop variable**: x
- **body**: print(x)

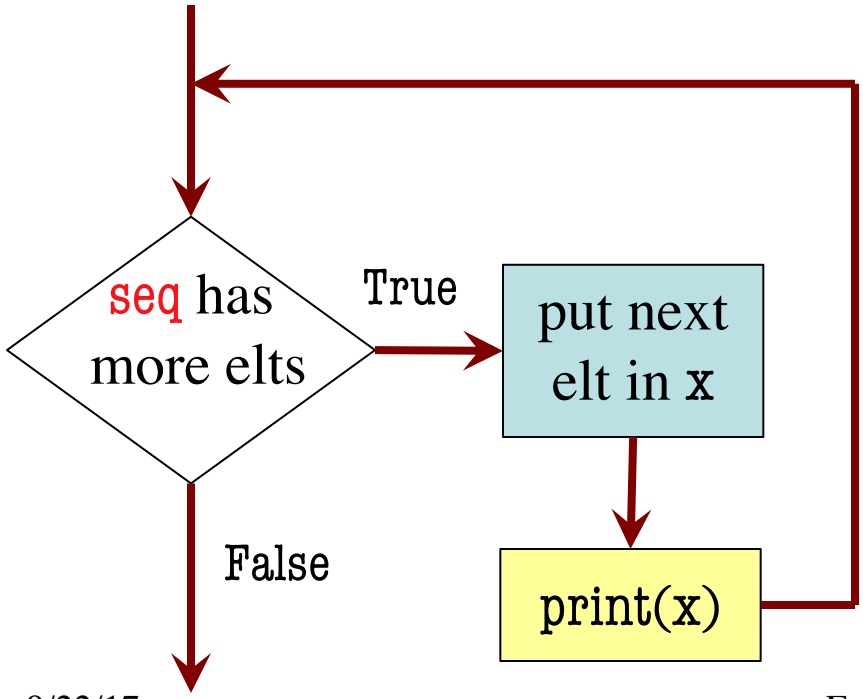

To execute the for-loop:

1. Check if there is a "next" element of **loop sequence**
2. If not, terminate execution
3. Otherwise, put the element in the **loop variable**
4. Execute all of **the body**
5. Repeat as long as 1 is true

Example: Summing the Elements of a List

```
def sum(thelist):
    """Returns: the sum of all elements in thelist
    Precondition: thelist is a list of all numbers
    (either floats or ints)"""
    # Create a variable to hold result (start at 0)
    # Add each list element to variable
    # Return the variable
```

Example: Summing the Elements of a List

```
def sum(thelist):
    """Returns: the sum of all elements in thelist
    Precondition: thelist is a list of all numbers
    (either floats or ints)"""
    result = 0

    for x in thelist:
        result = result + x

    return result
```

- **loop sequence:** thelist
- **loop variable**: x
- **body**: result=result+x

Example: Summing the Elements of a List

```
def sum(thelist):
    """Returns: the sum of all elements in thelist
    Precondition: thelist is a list of all numbers
    (either floats or ints)"""
    result = 0

    for x in thelist:
        result = result + x

    return result
```

Accumulator variable

- **loop sequence:** thelist
- **loop variable**: x
- **body**: result=result+x

For Loops and Conditionals

```
def num_ints(thelist):
    """Returns: the number of ints in thelist
    Precondition: thelist is a list of any mix of types"""
    # Create a variable to hold result (start at 0)
    # for each element in the list...
        # check if it is an int
        # add 1 if it is
    # Return the variable
```

For Loops and Conditionals

```
def num_ints(thelist):
    """Returns: the number of ints in thelist
    Precondition: thelist is a list of any mix of types"""
    result = 0
    for x in thelist:
        if type(x) == int:
            result = result+1
    return result
```

Body

Modifying the Contents of a List

```
def add_one(thelist):
    """(Procedure) Adds 1 to every element in the list
    Precondition: thelist is a list of all numbers
    (either floats or ints)"""
    for x in thelist:
        x = x+1
    # procedure; no return
```

DOES NOT WORK!

For Loops and Call Frames

```
def add_one(thelist):
    """Adds 1 to every elt
    Pre: thelist is all numb."""
1   for x in thelist:
2       x = x+1
```

add_one(seq):

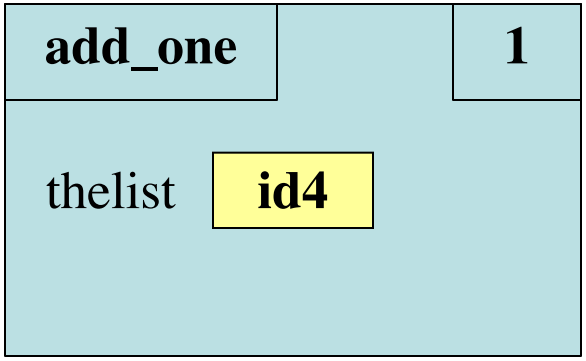

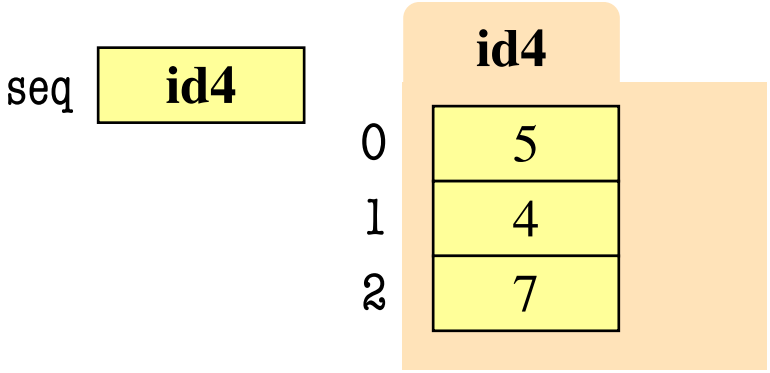

For Loops and Call Frames

```
def add_one(thelist):
    """Adds 1 to every elt
    Pre: thelist is all numb."""
1   for x in thelist:
2       x = x+1
```

add_one(seq):

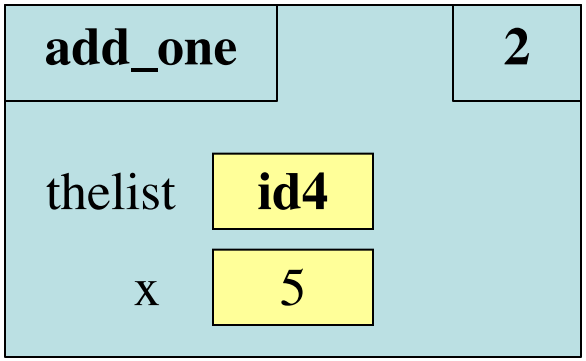

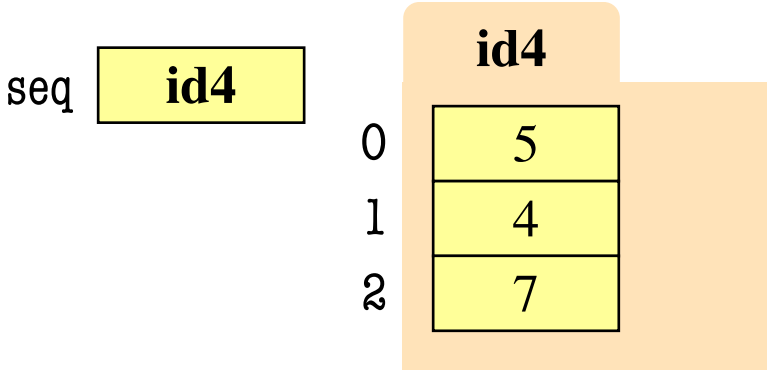

For Loops and Call Frames

```
def add_one(thelist):
    """Adds 1 to every elt
    Pre: thelist is all numb."""
1   for x in thelist:
2       x = x+1
```

add_one(seq):

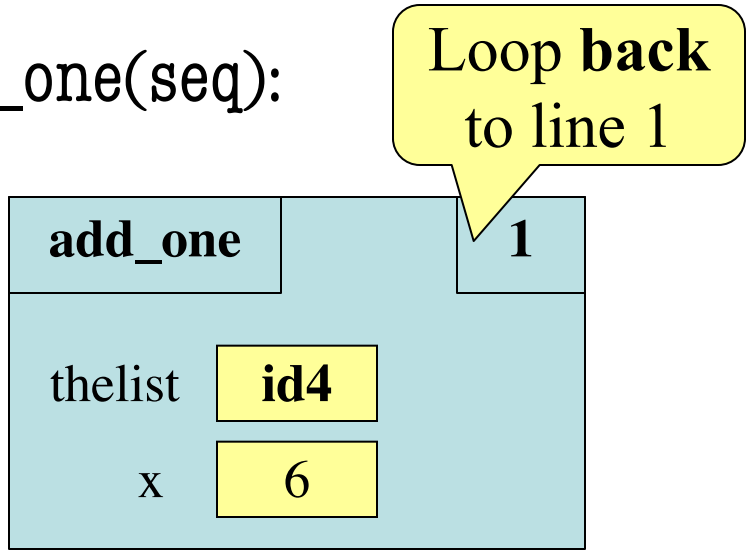

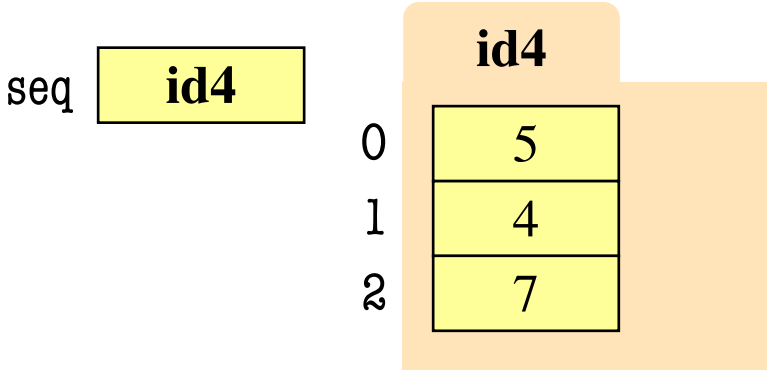

Increments x in **frame**

Does not affect folder

For Loops and Call Frames

```
def add_one(thelist):
    """Adds 1 to every elt
    Pre: thelist is all numb."""
1   for x in thelist:
2       x = x+1
```

add_one(seq):

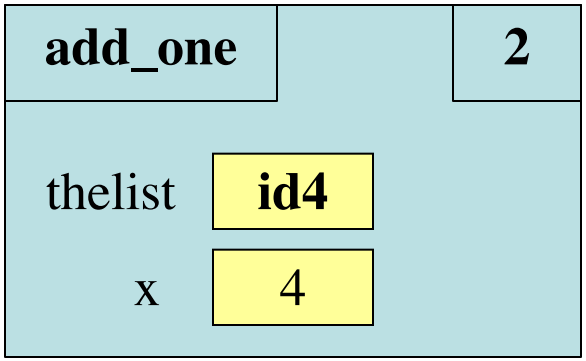

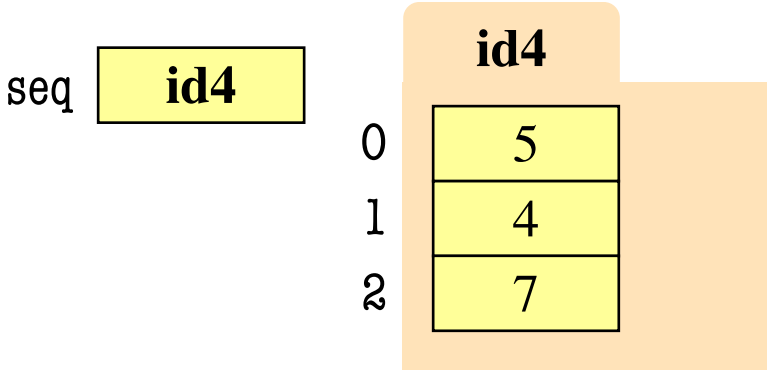

Next element stored in x.
Previous calculation lost.

For Loops and Call Frames

```
def add_one(thelist):
    """Adds 1 to every elt
    Pre: thelist is all numb."""
1   for x in thelist:
2       x = x+1
```

add_one(seq):

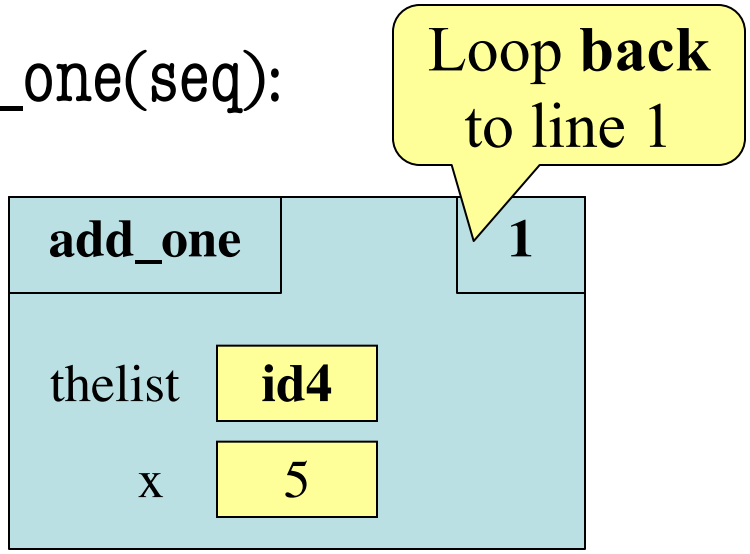

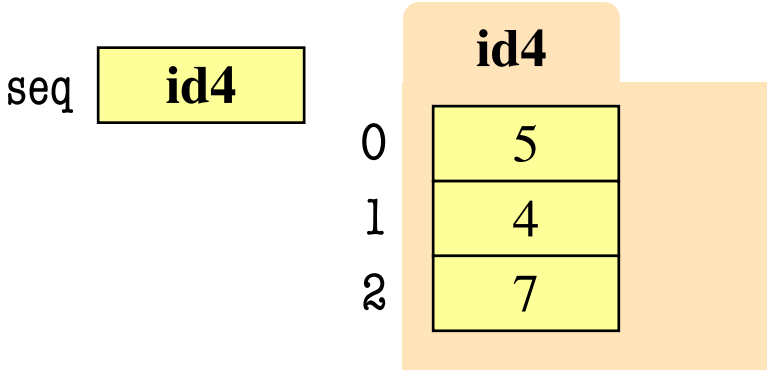

For Loops and Call Frames

```
def add_one(thelist):
    """Adds 1 to every elt
    Pre: thelist is all numb."""
1   for x in thelist:
2       x = x+1
```

add_one(seq):

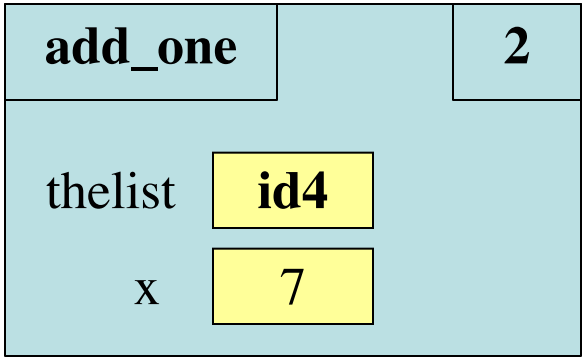

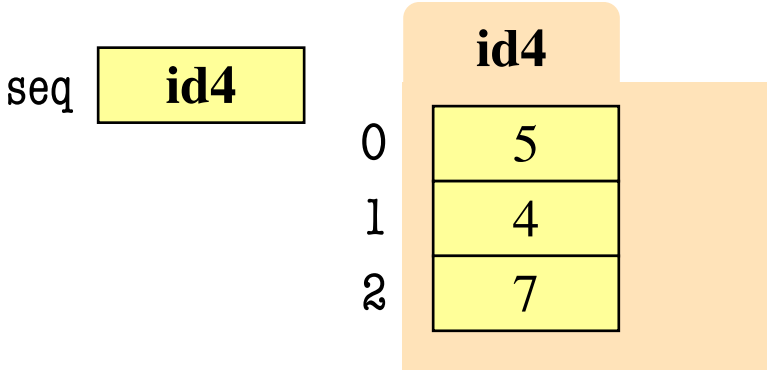

Next element stored in x.
Previous calculation lost.

For Loops and Call Frames

```
def add_one(thelist):
    """Adds 1 to every elt
    Pre: thelist is all numb."""
1   for x in thelist:
2       x = x+1
```

add_one(seq):

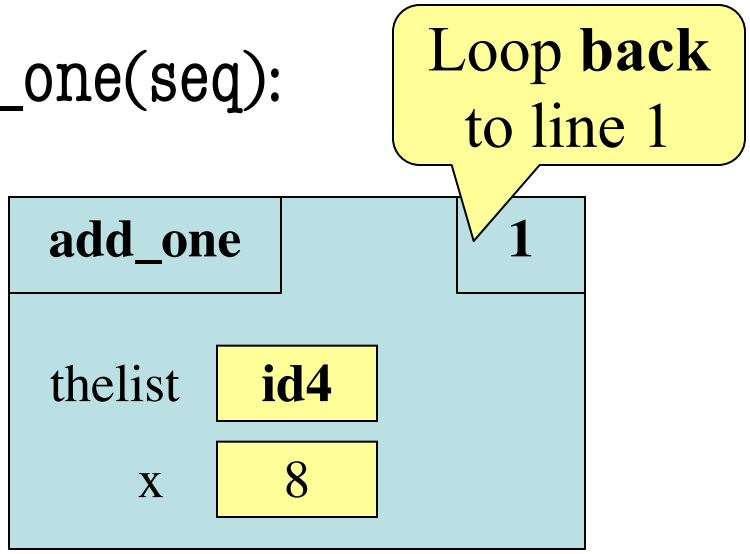

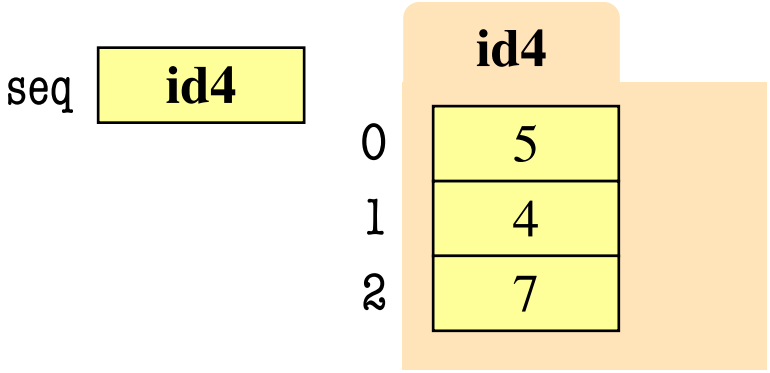

For Loops and Call Frames

```
def add_one(thelist):
    """Adds 1 to every elt
    Pre: thelist is all numb."""
1   for x in thelist:
2       x = x+1
```

add_one(seq):

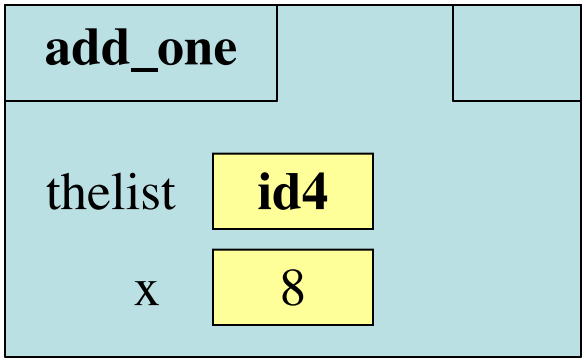

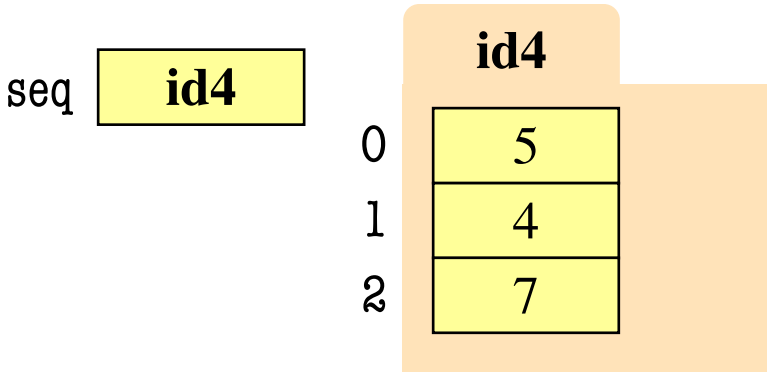

Loop is **completed.**
Nothing new put in x.

For Loops and Call Frames

```
def add_one(thelist):
    """Adds 1 to every elt
    Pre: thelist is all numb."""
1   for x in thelist:
2       x = x+1
```

add_one(seq):

ERASE WHOLE FRAME

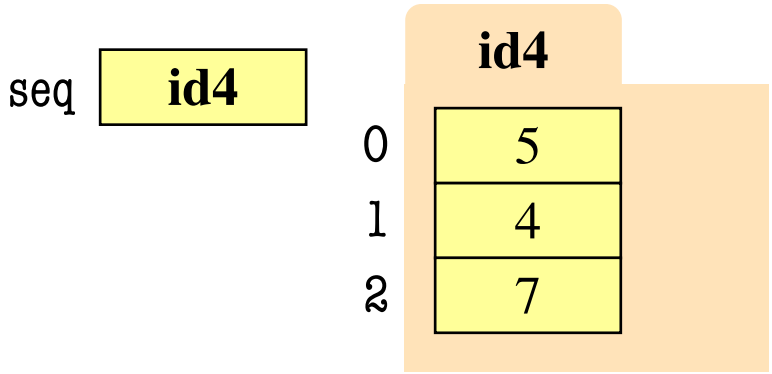

No changes to folder

On The Other Hand

```
def copy_add_one(thelist):
    """Returns: copy with 1 added to every element
    Precondition: thelist is a list of all numbers
    (either floats or ints)"""
    mycopy = []  # accumulator
    for x in thelist:
        x = x+1
        mycopy.append(x)  # add to end of accumulator
    return mycopy
```

Accumulator keeps result from being lost

How Can We Modify A List?

- **Never** modify loop var!
- This is an infinite loop:

```
for x in thelist:
    thelist.append(1)
```

Try this in Python Tutor
to see what happens

- Need a second sequence
- How about the *positions*?

```
thelist = [5, 2, 7, 1]
thepos = [0, 1, 2, 3]

for x in thepos:
    thelist[x] = x+1
```

How Can We Modify A List?

- **Never** modify loop var!
- This is an infinite loop:

```
for x in thelist:
    thelist.append(1)
```

Try this in Python Tutor
to see what happens

- Need a second sequence
- How about the *positions*?

```
thelist = [5, 2, 7, 1]
thepos  = [0, 1, 2, 3]
```

```
for x in thepos:
    thelist[x] = x+1
```

This is the Motivation for Iterators

- Iterators are objects
  - Contain data like a list
  - But cannot slice them
- Access data with `next()`
  - Function to get next value
  - Keeps going until end
  - Get an error if go to far
- Can convert back & forth
  - `myiter = iter(mylist)`
  - `mylist = list(myiter)`

Type/Class conversion

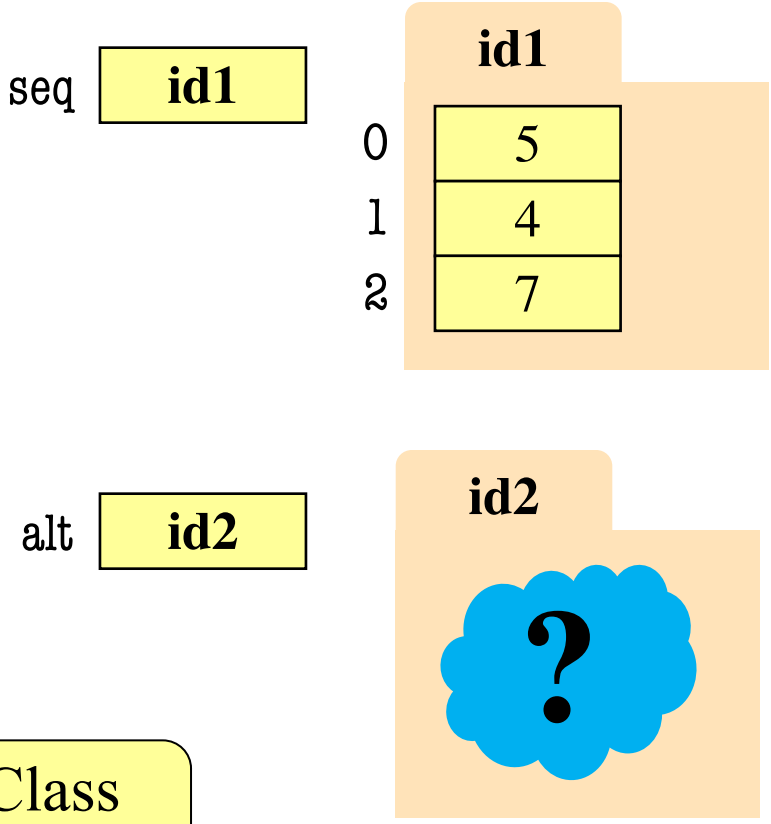

Iterators and Lists

```
>>> seq = [5, 4, 7]
>>> alt = iter(seq)
>>> next(alt)
5
>>> next(alt)
4
>>> next(alt)
7
>>> next(alt)
Traceback...
```

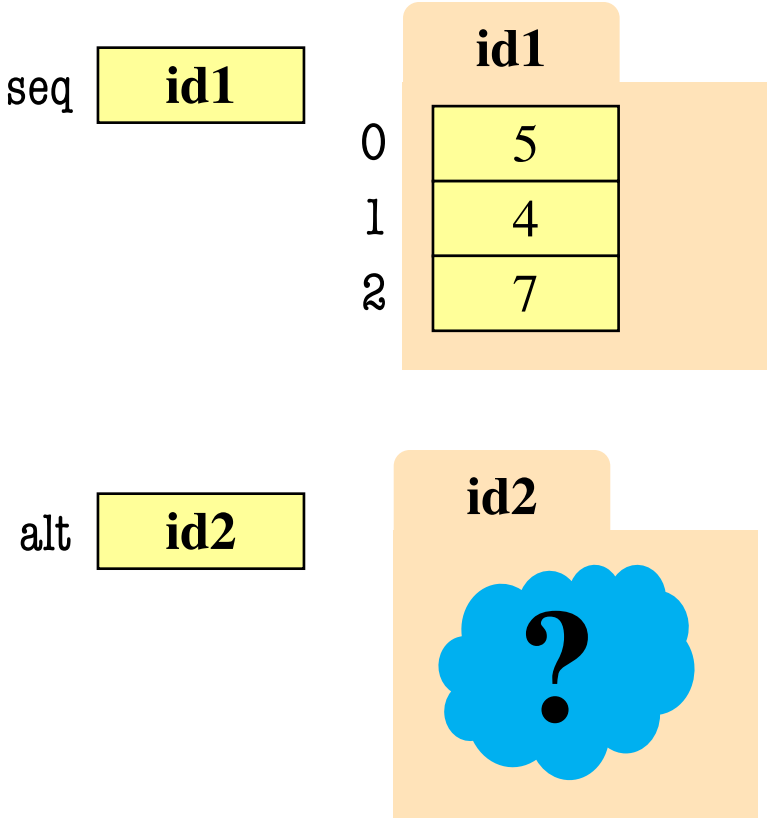

Iterators and For Loops

```
>>> seq = [5, 4, 7]
>>> alt = iter(seq)
>>> for x in alt:
        print(x)
5
4
7
```

Just like looping over the list

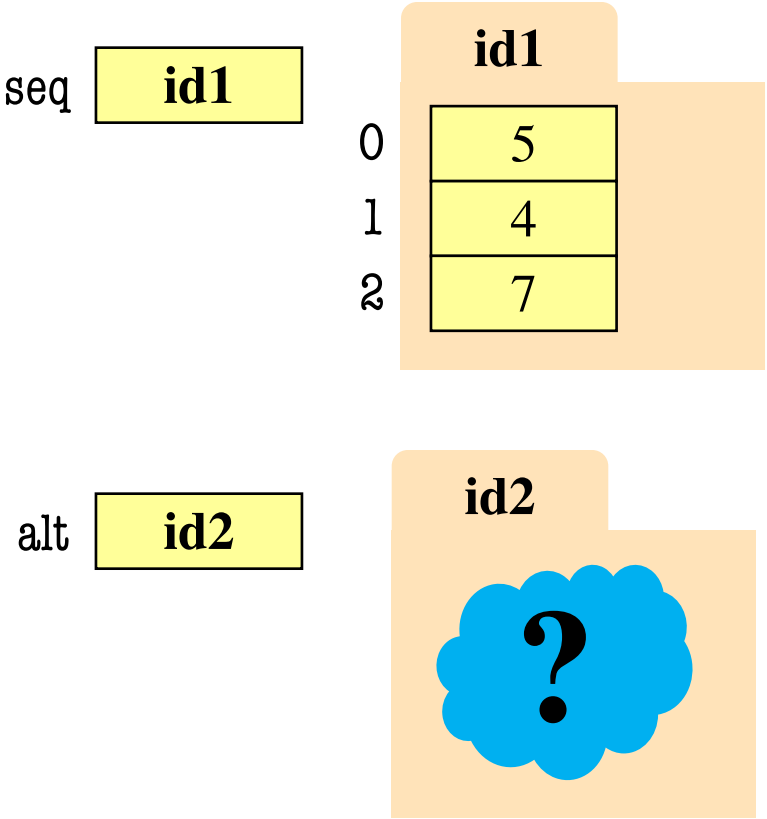

Iterators and For Loops

```
>>> seq = [5, 4, 7]
>>> alt = iter(seq)
>>> for x in alt:
        print(x)
5
4
7
```

Just like looping over the list

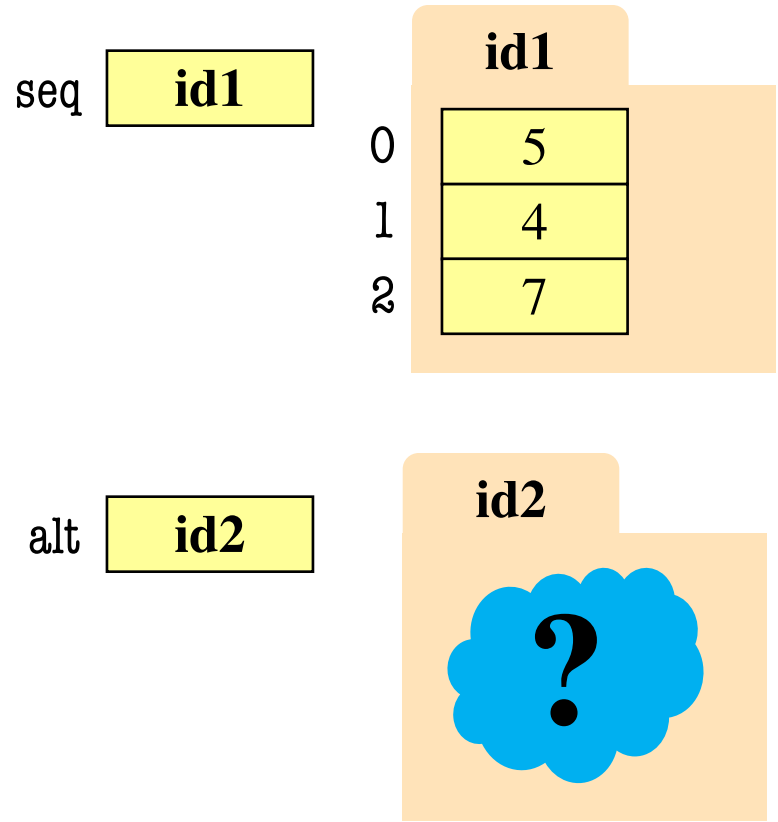

But still not safe to modify iterator's list

The Range Iterator

- `range(x)`
  - Creates an iterator
  - Stores [0,1,…,x-1]
  - **But not a list!**
  - But try `list(range(x))`
- `range(a,b)`
  - Stores [a,…,b-1]
- `range(a,b,n)`
  - Stores [a,a+n,…,b-1]

- Very versatile tool
- Great for processing ints

Accumulator

```
total = 0

# add the squares of ints
# in range 2..200 to total

for x in range(2,201):
    total = total + x*x
```

Modifying the Contents of a List

```
def add_one(thelist):
    """(Procedure) Adds 1 to every element in the list
    Precondition: thelist is a list of all numbers
    (either floats or ints)"""
    size = len(thelist)
    for k in range(size):
        thelist[k] = thelist[k]+1
    # procedure; no return
```

Iterator of list **positions** (safe)

WORKS!

Important Concept in CS: Doing Things Repeatedly

1. Process each item in a sequence
   - Compute aggregate statistics for a dataset, such as the mean, median, standard deviation, etc.
   - Send everyone in a Facebook group an appointment time
2. Perform *n* trials or get *n* samples.
   - **A4**: draw a triangle six times to make a hexagon
   - Run a protein-folding simulation for 10^6 time steps
3. Do something an unknown number of times
   - CUAUV team, vehicle keeps moving until reached its goal

Important Concept in CS: Doing Things Repeatedly

1. Process each item in a sequence
   - Compute aggregate statistics for a
     such as the mean, median, stand
   - Send everyone in a Facebook group an appointment time

```
for x in sequence:
    process x
```

2. Perform *n* trials or get *n* samples.
   - **A4**: draw a triangle six times to m
   - Run a protein-folding simulation

```
for x in range(n):
    do next thing
```

3. Do something an unknown number of times
   - CUAUV team, vehicle keeps moving until reached its goal

Cannot do this yet
Impossible w/ Python for

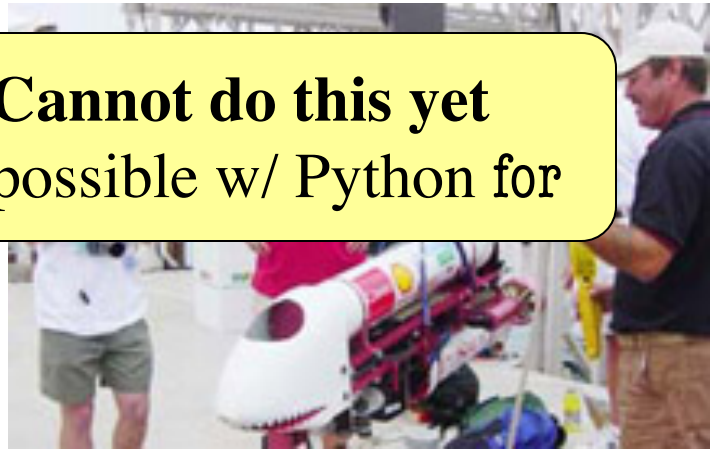

Beyond Sequences: The while-loop

while <*condition*>:

```
    statement 1
    ...
    statement n
```

repetend or **body**

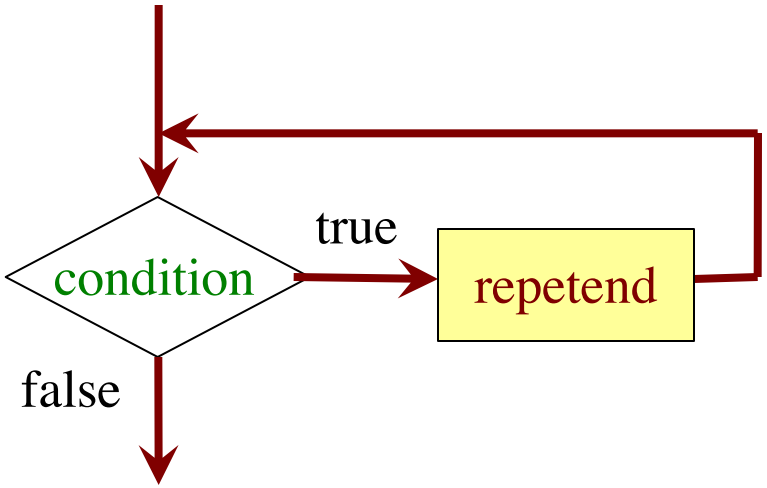

- Relationship to for-loop
  - Broader notion of "still stuff to do"
  - Must explicitly ensure condition becomes false
  - *You* explicitly manage what changes per iteration

While-Loops and Flow

```
print 'Before while'
count = 0
i = 0
while i < 3:
    print 'Start loop '+str(i)
    count = count + i
    i = i + 1
    print 'End loop '
print 'After while'
```

Output:

```
Before while
Start loop 0
End loop
Start loop 1
End loop
Start loop 2
End loop
After while
```

while Versus for

```
# process range b..c-1
for k in range(b,c)
    process k
```

```
# process range b..c-1
k = b
while k < c:
    process k
    k = k+1
```

Must remember to increment

```
# process range b..c
for k in range(b,c+1)
    process k
```

```
# process range b..c
k = b
while k <= c:
    process k
    k = k+1
```

Cases to Use while

Great for when you must **modify** the loop variable

```
# Remove all 3's from list t
i = 0
while i < len(t):
    # no 3's in t[0..i-1]
    if t[i] == 3:
        del t[i]
    else:
        i = i+1
```

```
# Remove all 3's from list t
while 3 in t:
    t.remove(3)
```

Cases to Use while

Great for when you must **modify** the loop variable

```
# Remove all 3's from list t
i = 0
while i < len(t):
    # no 3's in t[0..i-1]
    if t[i] == 3:
        del t[i]
    else:
        i += 1
```

Stopping point keeps changing.

```
# Remove all 3's from list t
while 3 in t:
    t.remove(3)
```

The stopping condition is not a numerical counter this time. Simplifies code a lot.

Cases to Use while

- Want square root of c
  - Make poly $f(x) = x^2 - c$
  - Want root of the poly (x such that $f(x)$ is 0)
- Use **Newton's Method**
  - x_0 = GUESS (c/2??)
  - $x_{n+1} = x_n - f(x_n)/f'(x_n)$
    $= x_n - (x_n x_n - c)/(2x_n)$
    $= x_n - x_n/2 + c/2x_n$
    $= x_n/2 + c/2x_n$
  - Stop when x_n good enough

```
def sqrt(c):
    """Return: square root of c
    Uses Newton's method
    Pre: c >= 0 (int or float)"""
    x = c/2
    # Check for convergence
    while abs(x*x - c) > 1e-6:
        # Get x_{n+1} from x_n
        x = x / 2 + c / (2*x)

    return x
```